CITY COUNCIL
MEETING AGENDA
July 21, 2016

Marc D. Tall, Mayor
Ronald J. Beauchamp, Mayor Pro-Tem
Patricia A. Baribeau, Council Member
Ralph B. Blasier, Council Member
Michael R. Sattem, Council Member

James V. O'Toole, City Manager
Robert S. Richards, CMC City Clerk
Ralph B. K. Peterson, City

City Council Chambers located at: City Hall – 410 Ludington Street – Room C101 – Escanaba MI 49829

The Council has adopted a policy to use a Consent Agenda, when appropriate. All items with an asterisk (*) are considered routine by the City Council and will be enacted by one motion. There will be no separate discussion of these items unless a Council Member or citizen so requests, in which event, the item will be removed from the General Order of Business and considered in its normal sequence on the Agenda.

Regular Meeting
Thursday, July 21, 2016, at 7:00 p.m.

CALL TO ORDER
ROLL CALL
INVOCATION/PLEDGE OF ALLEGIANCE - City Clerk Robert S. Richards
APPROVAL/CORRECTION(S) TO MINUTES - Regular Meeting – July 7, 2016, Special Meeting June 29, 2016
APPROVAL/ADJUSTMENTS TO THE AGENDA
CONFLICT OF INTEREST DECLARATION(S)
BRIEF PUBLIC COMMENT(S)
RETIREMENT PRESENTATION: - Mike Samuelson – Wastewater Department
PUBLIC HEARING(S)

1. **Public Hearing - Obsolete Properties Rehabilitation District No. 25 – 301 North Lincoln Road and 2601 3rd Avenue North.**
   Explanation: The Obsolete Properties Rehabilitation Act (PA 146 of 2000) allows partial exemption of property taxes for a specified period for certain types of property improvements within a specified area. The intent of the legislation is to encourage rehabilitation of underutilized or decaying commercial or commercial/residential properties in certain designated communities such as Escanaba. The first step in the OPRA process was the establishment of a district consisting of one or more eligible properties. In accordance with program requirements, the prospective buyer of 301 North Lincoln Road and 2601 3rd Avenue North, commonly known as Delta Plaza, has submitted a request that the City establish an OPRA District, which if approved, would allow for an Obsolete Property Rehabilitation exemption in the future.

NEW BUSINESS

1. **Approval - Small Water Meter Purchase - Water Department**
   Explanation: Administration is seeking Council approval to purchase replacement water meters and encoder receiver transmitters (ERTS) from United Systems & Software, Inc. of Benton, KY in an amount not to exceed $80,000. This purchase is included in the current fiscal year budget.

2. **Approval – Summer 2016 Leak Detection Survey - Water Department.**
   Explanation: Administration is seeking Council approval to retain the M.E. Simpson Company of Valparaiso, IN in the amount of $14,000 for the 2016 summer water distribution leak detection survey in an amount not to exceed $14,000. This purchase is included in the current fiscal year budget.

3. **Approval – Spring 2017 Leak Detection Survey - Water Department.**
   Explanation: Administration is seeking Council approval to retain the Davies Water (a division of) Ferguson, Inc. of Appleton, WI in the amount of $13,000 for the 2017 spring water distribution leak detection survey in an amount not to exceed $13,000. This purchase is included in the current fiscal year budget.

4. **Approval - Eco-Mat Pilot Program - Wastewater Department.**
Explanation: Administration is seeking Council approval to retain Blue Water Technologies of Hayden, ID to conduct two (2) separate pilot programs for the Eco-Mat Rotating Belt Filter system at a cost of $7,500 each. Total monies spent on this project will not exceed $17,000. This study is not budgeted in the current fiscal year budget, however funds are available from the wastewater fund balance.

5. **Presentation – Escanaba Area Public Schools Non-Homestead Millage Renewal.**
Explanation: Representatives from Escanaba Area Public Schools will make a presentation on their proposed Non-Homestead Millage renewal.

6. **Approval – Resolution of Support – Bonifas Art Center – 2017 Music Mondays Summer Concerts.**
Explanation: The Bonifas Art Center is seeking Council approval of a resolution supporting their grant application to the Michigan Council for Arts and Cultural Affairs seeking funds for the "Music Mondays" Summer Concert Series. If approved, the City of Escanaba will serve as the Administrator for the funds. Administration is recommending approval.

APPOINTMENTS
BOARD, COMMISSION, AND COMMITTEE REPORTS
GENERAL PUBLIC COMMENT
ANNOUNCEMENTS
ADJOURNMENT

Respectfully Submitted

James V. O'Toole
City Manager

OFFICIAL PROCEEDINGS
CITY COUNCIL
CITY OF ESCANABA, MICHIGAN
Study Session Meeting
Wednesday, June 29, 2016

Pursuit to a special meeting notice posted June 8, 2016, the meeting was called to order by the Honorable Mayor Marc D. Tall at 12:00 p.m. in the Main Meeting Room of the Catherine Bonifas Civic Center located at 225 North 21st Street.

Present: Mayor Marc D. Tall, Council Members, Patricia A. Baribeau, Ronald J. Beauchamp, Ralph B. Blasier (arrived at 12:10 p.m.) and Michael R. Sattem.

Absent: None

Also Present: City Manager James V. O'Toole, City Department Heads, media, and members of the public.

ADJUSTMENTS TO THE AGENDA

Sattem moved, Baribeau seconded, **CARRIED UNANIMOUSLY**, to approve the City Council Agenda as submitted.

CONFLICT OF INTEREST DECLARATION – None

NEW BUSINESS

Review/Discussion – Revised Purchasing Policy and Procedures Manual.

City Administration led a review and discussion concerning a revised Purchasing Policy and Procedure Manual. The following was discussed:

- All Departments do their own purchasing;
- Spending limit of $6,000 was now an issue in today's economy;
- Former Controller Dewar and Manager O'Toole briefly reviewed the draft policy;
- Code of conduct discussion regarding Department Head resignation. Would seek legal opinion;
- Reviewed commodity purchases under exempt transitions. Discussed revising exemption commodity definition regarding other unknown future purchases;
- Reviewed Open Meetings Act regarding Council Emergency Meetings in time of Natural Disasters;
- Discussion on Bid and Performance Bonds;
- Council and Administration reviewed the new $24,999 purchasing limit. Discussed whether this spending limit was too high or not high enough. After discussion, Manager O'Toole stated the Purchasing Policy would have an annual review.

After further discussion, Manager O'Toole stated he would make necessary

revisions, as recommend, to the proposed purchasing policy, and forward to Council to be put on a future Council Agenda for approval at a future Council Meeting.

GENERAL PUBLIC COMMENT – None

Hearing no further public comment, the Council adjourned at 12:56 p.m.

Respectfully submitted,

Robert S. Richards
City Clerk

Approved: _____
Marc D. Tall, Mayor

OFFICIAL PROCEEDINGS
CITY COUNCIL
CITY OF ESCANABA, MICHIGAN
Regular Council Meeting
Thursday, July 7, 2016

The meeting was called to order by the Honorable Mayor Marc D. Tall at 7:00 p.m. in the Council Chambers of City Hall located at 410 Ludington Street.

Present: Mayor Marc D. Tall, Council Members, Patricia A. Baribeau, Ralph B. Blasier, Ronald J. Beauchamp, and Michael R. Sattem.

Absent: None

Also Present: City Manager James V. O'Toole, City Department Heads, media, and members of the public.

Pastor Cheryl Duke of First Presbyterian Church, gave the invocation and led Council in the Pledge of Allegiance.

Sattem moved, Blasier seconded, **CARRIED UNANIMOUSLY**, to approve Regular Meeting Minutes from June 16, 2016, as submitted.

ADJUSTMENTS TO THE AGENDA

Beauchamp moved, Blasier seconded, **CARRIED UNANIMOUSLY**, to approve the City Council Agenda as submitted.

CONFLICT OF INTEREST DECLARATION

Council Member Blasier advised he was a member of the Yacht Club.

BRIEF PUBLIC COMMENT

William Bonifas Fine Arts Center representative Business Director Sue Roll spoke in support of their annual lease with the City and thanked Council for all their past decades of support.

Jon Anthony, member of the Yacht Club, thanked Council for the past support to promote boating in the community. He spoke of the lease agreement, and asked that the item be tabled so their Yacht Club members could meet and review the agreement.

PUBLIC HEARINGS – None

NEW BUSINESS

Approval – Street Paving Contract – Department of Public Works.

On June 9, 2016, four (4) invitations to submit bids for street paving were sent out to area contractors. Additionally, an advertisement for bids was put in the Daily Press. A bid opening was conducted on June 21, 2016, with one (1) bid received. After review and consideration by the Administration, the bid from Payne and Dolan, of Gladstone, Michigan, was recommended for approval at their stated unit prices. This appropriation was included in the current fiscal year budget.

Public Works Director/City Engineer Bill Farrell reviewed the bidding process and streets scheduled to be repaired.

NB-1 Blasier moved, Sattem seconded, to approve a street paving bid from Payne and Dolan, of Gladstone, Michigan, at their stated unit prices.

Upon a call of the roll, the vote was as follows:

Ayes: Blasier, Sattem, Baribeau, Beauchamp, Tall
Nays: None

MOTION CARRIED.

Approval – Annual Service Agreement - William Bonifas Fine Arts Center.

The William Bonifas Fine Arts Center sought Council approval of their 2016-17 service agreement in the amount of $5,000. Under the terms of the agreement, the center will provide a minimum of 8 exhibitions in the Alice Powers Exhibition Hall, 5 plays, 25 classes in the creative and visual arts, and workshops, which will be available to the citizens of Escanaba. Administration recommended approval of the service agreement. This appropriation was included in the current fiscal year budget.

NB-2 Sattem moved, Beauchamp seconded, to approve the William Bonifas Fine Arts Center 2016-17 Service Agreement in the amount of $5,000.

Upon a call of the roll, the vote was as follows:

Ayes: Sattem, Beauchamp, Baribeau, Blasier, Tall
Nays: None

MOTION CARRIED.

Approval – Escanaba Yacht Club Lease Renewal - Ludington Park.

The Escanaba Yacht Club sought Council approval of a 10 year lease for City property located in Ludington Park for the club's building. Under the terms of the lease, the Escanaba Yacht Club would provide opportunities for members of the public to have access to the building and club activities, conduct a 4th of July brunch which shall be open to the public, host the Inland Seas, an educational vessel, sponsor a "Walk the Dock" event whereby the public will be invited to tour individual boats, provide an "Open

House" for the Fun Run, sponsor sailing races wherein any member of the public can crew on a boat , co-sponsor "Marina Fest" and rent its facilities to the general public for high school graduation parties and wedding receptions. Administration recommended approval of the lease.

NB-3 After discussion, and comments from Mr. Anthony, Baribeau moved, Blasier seconded, **CARRRIED UNANIMOUSLY**, to table Escanaba Yacht Club Lease Renewal - Ludington Park to the next regular Council meeting of July 21, 2016, but no later than the Council Meeting of August 4, 2016.

Setting of Public Hearing - Obsolete Property Rehabilitation District (OPRA) No. 25 – 301 North Lincoln Road and 2601 3rd. Avenue North.

The Obsolete Properties Rehabilitation Act (PA 146 of 2000) allows partial exemption of property taxes for a specified period for certain types of property improvements within a specified area. The intent of the legislation is to encourage rehabilitation of underutilized or decaying commercial or commercial/residential properties in certain designated communities such as Escanaba. In accordance with program requirements, the prospective buyer of 301 North Lincoln Road and 2601 3rd Avenue North, commonly known as Delta Plaza, has submitted a request that the City establish an OPRA District, which if approved would allow for an Obsolete Property Rehabilitation exemption in the future. Administration requested Council to schedule a public hearing for July 21, 2016, for the consideration of establishing Obsolete Rehabilitation District No. 25, in accordance with the requirements of PA 146 of 2000.

NB-4 Blasier moved, Sattem seconded, to schedule a public hearing for July 21, 2016, for the consideration of establishing Obsolete Rehabilitation District No. 25, in accordance with the requirements of PA 146 of 2000.

Upon a call of the roll, the vote was as follows:

Ayes: Blasier, Sattem, Beauchamp, Baribeau, Tall
Nays: None

MOTION CARRIED.

Approval – Escanaba Power Plant Insurance Claim – Michigan Municipal Risk Management Authority.

Administration sought Council approval to accept the Michigan Municipal Risk Management Authority's offer of settlement for the Escanaba Power Plant insurance claim in the amount of $2,253,270.34, less the deductible of $250,000, for the total payment of $2,003,270.34.

Manager O'Toole reviewed the City expenditures expended during the event, and negotiations related to the insurance settlement.

NB-5 Beauchamp moved, Baribeau seconded, to approve to accept the Michigan Municipal Risk Management Authority's offer of settlement for the Escanaba Power Plant insurance claim in the amount of $2,253,270.34, less the deductible of $250,000, for the total payment of $2,003,270.34.

Upon a call of the roll, the vote was as follows:

Ayes: Beauchamp, Baribeau, Sattem, Blasier, Tall
Nays: None

MOTION CARRIED.

Approval – West Ludington Street Fiberglass Pole Replacement – Electric Department.

Administration sought Council approval to purchase two (2) black fiberglass street light poles from the Rural Electric Supply Cooperative (RESCO) in the amount of $7,230. The poles were needed to replace damaged poles on the west end of Ludington Street, between Stephenson Avenue and Lincoln Road.

NB-6 Beauchamp moved, Blasier seconded, to approve to purchase two (2) black fiberglass street light poles from the Rural Electric Supply Cooperative (RESCO) in the amount of $7,230.

Upon a call of the roll, the vote was as follows:

Ayes: Beauchamp, Blasier, Sattem, Baribeau, and Tall
Nays: None

MOTION CARRIED.

APPOINTMENT(S) TO CITY BOARDS, COMMISSIONS, AND COMMITTEES

Mayor Tall, with Council consensus, appointed Jean-Paul Rudell to the Traffic Safety Committee term ending June 1, 2019.

BOARD, COMMISSION, AND COMMITTEE REPORTS

Council Members reviewed City Board and Commission meetings each attended since the last City Council Meeting.

GENERAL PUBLIC COMMENT

Peggy O'Connell and Kim Caracus commented on the City Fireworks Ordinance and complained on the number of days residents were allowed to discharge their

fireworks. They felt the number of days in the current ordinance that residents were allowed to discharge their fireworks was too long. They asked Council to amend the ordinance to limit the number of days allowed to discharge fireworks to the State minimum.

Council asked Administration to provide a report from Public Safety and a recommendation for possible changes.

Manager O'Toole stated this fall a Council Work Session would be scheduled to discuss the issue.

ANNOUNCEMENTS

- The new Library Website would be launching Friday, July 8th.

Hearing no further public comment, the Council adjourned at 7:42 p.m.

Respectfully submitted

Robert S. Richards, CMC
City Clerk

Approved: _____
Marc D. Tall, Mayor

P.H. #1
CC 7/21/16

MEMORANDUM

Date: June 28, 2016
To: Jim O'Toole, Manager
Robert Richards, Clerk
From: Kevin Dubord, Assessing Office KD
Subject: Agenda Items Request
July 7, 2016 Meeting

Please place the following on the July 7, 2016 council agenda:

Request to set July 21, 2016 as a public hearing date to:

1. Establish Obsolete Properties Rehabilitation District No. 25 for D.P. Management, LLC property at 301 North Lincoln Road and 2601 3rd Avenue North, which includes ground floor retail space and a vacant lot. The building was built in 1970 and is currently occupied by a number of retailers. The request also includes a vacant lot at 2601 3rd Avenue North. D.P. Management, LLC has requested the district and plans to update the facility including parking lot repairs, asbestos, abatement, roof upgrades, HVAC updates, and a variety of needed upgrades to the interior and exterior of the building.

The public hearing will allow the establishment of District 25 and it will allow the property owner to apply for an OPRA exemption later this year. Attached are copies of background information for this property. Once the district is established, the property owner may begin the rehabilitation process.

Excerpt of the minutes of a regular meeting of the Escanaba City Council held on July 21, 2016, at the Council Chambers of City Hall, 410 Ludington Street, Escanaba, Michigan, at 7:00 p.m.

Present: Mayor Marc D. Tall, Council Members, Patricia A. Baribeau, Ralph B. Blasier, Ronald J. Beauchamp, and Michael R. Sattem.

Absent: None

PH-1 "By Council Member, seconded by Council Member;

CITY OF ESCANABA, DELTA COUNTY, MICHIGAN
RESOLUTION TO ESTABLISH
OBSOLETE PROPERTY REHABILITATION DISTRICT NO. 25

Whereas, Pursuant to P.A. 146 of 2000, the City of Escanaba has the authority to establish "Obsolete Property Rehabilitation Districts" within the City of Escanaba; and

Whereas, DP Management, LLC, has filed a written request with the clerk of the City of Escanaba requesting the establishment of the Obsolete Property Rehabilitation District for an area in the vicinity of 301 North Lincoln Road located in the City of Escanaba hereafter described; and

Whereas, The City Council of the City of Escanaba determined that the district meets the requirements set forth in section 3(1) of PA 146 of 2000; and

Whereas, Written notice has been given by mail to all owners of real property located within the district and to the public by newspaper advertisement in the Daily Press and/or public posting of the hearing on the establishment of the proposed district; and

Whereas, On July 21, 2016, a public hearing was held and all residents and taxpayers of the City of Escanaba were afforded an opportunity to be heard thereon; and

Whereas, The City Council deems it to be in the public interest of the City of Escanaba to establish the Obsolete Property District Rehabilitation as proposed.

Now, Therefore, Be It Resolved by the City Council of the City of Escanaba that the following described parcel(s) of land situated in the City of Escanaba, Delta County, and State of Michigan, to wit:

• Parcel #; SEC 25 T39N R23W [13.16 AC]
PRT OF BLKS 7, 8 & 9 OF THE CITY CENTER ADDITION NO. 3 & PRT OF SE1/4 OF NE1/4 SEC 25 FRM THE E1/4 COR OF SEC 25 TH N0D39'E 211.81 FT TH N89D14'40"W 50 FT TO INT OF N R/W LN OF 1ST AVE NO & W R/W LN STATE HWY M35 TH N89D58'W 100 FT TO POB TH N89D58'W 550.48 FT TH NORTH 361 FT TH N89D58'W 229.8 FT TH N0D05'39"E 366.06 FT TH N84D50'E 893.52 FT TO W R/W STATE HWY M35 TH S0D39'W 160.83 FT TH S84D50'W 150.73 FT TH S0D39'W 82.39 FT TH S0D39'W 450 FT TH N89D58'W 100 FT TH S0D39'W 100 FT TO POB. (CORRECTED LEGAL 12-23-2013 DRN); and

PRT S 1/2 NE 1/4 SEC 25 T39N R23W COM @ E 1/4 COR TH N 0D 39M E 211.81 FT TH N 89D

14M 40S W 50 FT TO PT ON N ROW 1ST AVE N & W ROW M-35 TH N 89D 58M W 1327.48 FT TO POB TH N 89D 58M W 292.69 FT TO PT 959.15 FT E OF N-S 1/4 LN TH N 0D 02M E 291 FT TH S 89D 58M E 148.69 FT TH N 0D 02M E 382.5 FT TO S ROW 3RD AVE N TH N 84D 50M E ALG 144.58 FT TH S 0D 02M W 686.48 FT TO POB 3.2421 AC M/L AC #143-2A, City of Escanaba, Delta County, Michigan

Be and hereby is established an Obsolete Property Rehabilitation District pursuant to the provisions of P.A. 146 of 2000 to be known as Obsolete Property Rehabilitation District No. 25.

The vote was as follows:

Ayes:
Nays:

RESOLUTION DECLARED ADOPTED.

STATE OF MICHIGAN)
ss)
COUNTY OF DELTA)

I the undersigned, being duly qualified and acting City Clerk of the City of Escanaba, do hereby certify that the foregoing constitutes a true and complete excerpt of the Escanaba City Council Minutes of the City of Escanaba, County of Delta, Michigan, at a regular City Council Meeting held on July 21, 2016, and that said meeting was conducted and public notice was given pursuant to and in full compliance with the Open Meetings Act, Act 267, Public Acts of Michigan, and that the minutes of said meeting were kept and will be or have been made available as required by said Act.

_____
Robert S. Richards, CMC, City Clerk

DP
MANAGEMENT, LLC

Joshua Vickery
DP Management, LLC
11506 Nicholas St
Omaha, NE 68154

June 16, 2016

Jim O'Toole
City of Escanaba
PO Box 948
Escanaba MI 49829

Dear Jim,

This letter is to request an Obsolete Properties Rehabilitation District for the property at 301 North Lincoln Rd, the Delta Plaza Mall, Escanaba MI be established.

I am enclosing a copy of the signed Purchase Agreement. There are several large and expensive projects that need to be addressed. Mill and overlay parking lot, asbestos abatement, roofs, HVAC, and a variety of needed upgrades to the interior and exterior of building.

Please contact me at the above address if you have any questions or need additional information. I can be contacted by phone at (402) 493-2800 or e-mail at jvickery@dp-mgmt.com.

Sincerely,

Josh Vickery

Google earth

feet 800

meters 200

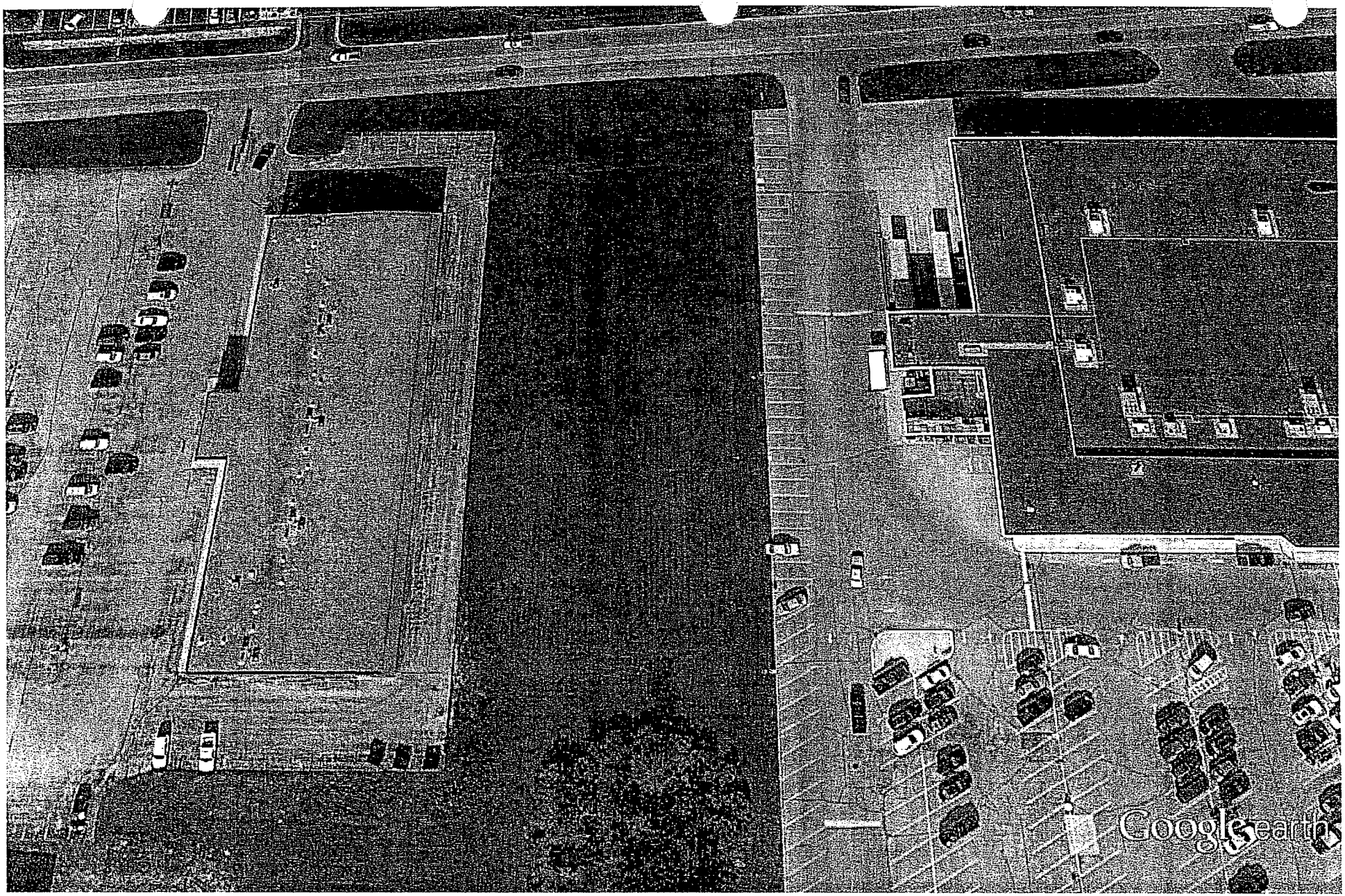

Google earth

feet 300

meters 100

Parcel Number: 051-020-2825-278-001 Jurisdiction: City of Escanaba County: Delta Printed on 0[illegible]/2016

Grantor	Grantee	Sale Price	Sale Date	Inst. Type	Terms of Sale	Liber & Page	Verified By	Prcnt. Trans.
RUBLOFF DELTA LLC	ESCANABA DELTA MALL LLC	3,704,084	02/14/2014	SD	FORECLOSURE	1098/571	DAINA NORDEN	100.0
RUBLOFF DELTA LLC	AMICUS MANAGEMENT INC	0	08/15/2012	JDG	QCD	1054/832		100.0
BRADLEY REAL ESTATE INC	RUBLOFF DELTA LLC	***,***	03/29/2000	WD	ARMS-LENGTH	559/912		0.0

Property Address

301 NORTH LINCOLN ROAD

Class: Commercial, 201 Zoning:

School: Escanaba Schools 21010

P.R.E. 0%

Map #:

2017 Est TCV Tentative

Building Permit(s)	Date	Number	Status
COMMERCIAL	04/27/2015	2015-037	COMPLETE
COMMERCIAL	11/10/2009	090257	COMPLETE
COMMERCIAL	12/08/2003	31280	COMPLETE
COMMERCIAL	12/03/2003	30786	COMPLETE

Owner's Name/Address

ESCANABA DELTA MALL LLC
AMICUS MANAGEMENT
977 ADA PLACE DR SE
GRAND RAPIDS MI 49546-8412

X Improved | Vacant

Land Value Estimates for Land Table 20.COM 1

Description	Frontage	Depth	* Factors * Front	Depth	Rate	%Adj.	Reason	Value
PRIME VAR (0-14 AC)			13.160 Acres		115,000	100		1,513,400
			13.16 Total Acres		Total Est. Land Value =			1,513,400

Land Improvement Cost Estimates

Description	Rate	CountyMult.	Size	%Good	Cash Value
D/W/P: Asphalt Paving	1.61	1.30	417000	50	436,391

Commercial/Industrial Local Cost Land Improvements

Description	Rate	CountyMult.	Size	%Good	%Arch.Mult	Cash Value
WATER&SEWER	2500.00	1.00	1.0	96	100	2,400

Total Estimated Land Improvements True Cash Value = 438,791

Public Improvements

- X Paved Road
- X Storm Sewer
- X Sidewalk
- X Water
- X Sewer
- X Electric
- X Gas
- X Curb
- X Street Lights
- Standard Utilities
- Underground Utils.

Topography of Site

- X Level
- Rolling
- Low
- X High
- Landscaped
- Swamp
- Wooded
- Pond
- Waterfront
- Ravine
- Wetland
- Flood Plain

Tax Description

SEC 25 T39N R23W [13.16 AC]
PRT OF BLKS 7, 8 & 9 OF THE CITY CENTER ADDITION NO. 3 & PRT OF SE1/4 OF NE1/4 SEC 25 FRM THE E1/4 COR OF SEC 25 TH N0D39'E 211.81 FT TH N89D14'40"W 50 FT TO INT OF N R/W LN OF 1ST AVE NO & W R/W LN STATE HWY M35 TH N89D58'W 100 FT TO POB TH N89D58'W 550.48 FT TH NORTH 361 FT TH N89D58'W 229.8 FT TH N0D05'39"E 366.06 FT TH N84D50'E 893.52 FT TO W R/W STATE HWY M35 TH S0D39'W 160.83 FT TH S84D50'W 150.73 FT TH S0D39'W 82.39 FT TH S0D39'W 450 FT TH N89D58'W 100 FT TH S0D39'W 100

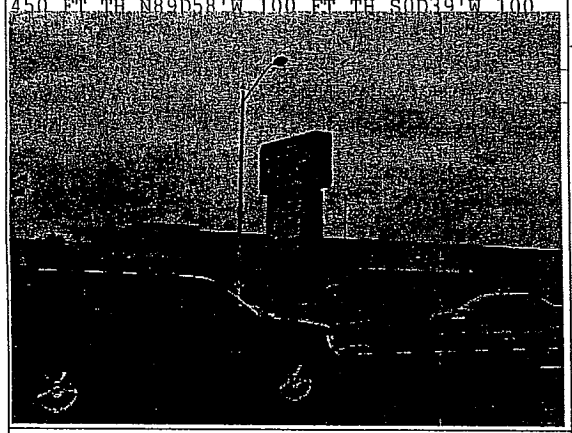

Work Description for Permit 2015-037, Issued 04/27/2015: DEMO & RENOVATION OF SPACE #37 IN MALL
Work Description for Permit 090257, Issued 11/10/2009: FITNESS CENTER
Work Description for Permit 31280, Issued 12/08/2003: STORE FRONT & BATHROOM
Work Description for Permit 30786, Issued 12/03/2003: REMODEL FOR CLOTHING STORE
Work Description for Permit 7347, Issued 03/22/2000: ALTER STORE

Who	When	What
TW	06/20/2014	Data Enter
KD	07/18/2012	Data Enter
KD	06/29/2011	Inspected

Year	Land Value	Building Value	Assessed Value	Board of Review	Tribunal/ Other	Taxable Value
2017	Tentative	Tentative	Tentative			Tentative
2016	756,700	1,227,446	1,984,146			1,984,146S
2015	859,902	1,757,256	2,617,158			2,617,158S
2014	566,102	1,970,076	2,536,178			2,286,000C

The Equalizer. Copyright (c) 1999 - 2009. Licensed To: City of Escanaba, County of Delta, Michigan

*** Information herein deemed reliable but not guaranteed***

Desc. of Bldg/Section: SHOPPING MALL
Calculator Occupancy: Shopping Center, Enclosed

Class: C
Floor Area: 240,429
Gross Bldg Area: 240,429
Stories Above Grd: 1
Average Sty Hght : 12
Bsmnt Wall Hght

Depr. Table : 3%
Effective Age : 55
Physical %Good: 35
Func. %Good : 100
Economic %Good: 70

1970	Year Built Remodeled
14	Overall Bldg Height

Comments:

Construction Cost

High	Above Ave.	X	Ave.		Low

** ** Calculator Cost Data ** **
Quality: Low Cost Adj: %+0 $/SqFt:0.00
Heat#1: Complete H.V.A.C. 100
Heat#2: Complete H.V.A.C. 0%
Ave. SqFt/Story: 240429
Ave. Perimeter: 2847
Has Elevators:

*** Basement Info ***
Area:
Perimeter:
Type: Finished/Office (No Rates)
Heat: No Heating or Cooling

* Mezzanine Info *
Area #1:
Type #1: Office (No Rates)
Area #2:
Type #2: Office (No Rates)

* Sprinkler Info *
Area:
Type: Low

<<<<< Calculator Cost Computations >>>>>
Class: C Quality: Low Cost Percent Adj: +0

Base Rate for Upper Floors = 34.65

(10) Heating system: Complete H.V.A.C. Cost/SqFt: 0.00 100%
Adjusted Square Foot Cost for Upper Floors = 34.65

1 Stories Number of Stories Multiplier: 1.000
Average Height per Story: 12 Height per Story Multiplier: 1.000
Average Height per Story: 12 Height per Story Multiplier: 1.000
Refined Square Foot Cost for Upper Floors: 34.65

County Multiplier: 1.37, Final Square Foot Cost for Upper Floors = 47.471

Total Floor Area: 240,429 Base Cost New of Upper Floors = 11,413,285

Reproduction/Replacement Cost = 11,413,285
Eff.Age:55 Phy.%Good/Abnr.Phy./Func./Econ./Overall %Good: 35 /100/100/70 /24.5
Total Depreciated Cost = 2,796,255

ECF (Com 1) 0.721 => TCV of Bldg: 1 = 2,016,100
Replacement Cost/Floor Area= 47.47 Est. TCV/Floor Area= 8.39

(1) Excavation/Site Prep:

(2) Foundation: Footings

X	Poured Conc		Brick/Stone		Block

(3) Frame:

(4) Floor Structure:

(5) Floor Cover:

(6) Ceiling:

(7) Interior:

(8) Plumbing:

	Many Above Ave.		Average Typical		Few None

	Total Fixtures		Urinals
	3-Piece Baths		Wash Bowls
	2-Piece Baths		Water Heaters
	Shower Stalls		Wash Fountains
	Toilets		Water Softeners

(9) Sprinklers:

(10) Heating and Cooling:

X	Gas Oil		Coal Stoker		Hand Fired Boiler

(11) Electric and Lighting:

Outlets:		Fixtures:	
X	Few	X	Few
	Average		Average
	Many		Many
	Unfinished		Unfinished
	Typical		Typical
	Flex Conduit		Incandescent
	Rigid Conduit		Fluorescent
	Armored Cable		Mercury
	Non-Metalic		Sodium Vapor
	Bus Duct		Transformer

(13) Roof Structure: Slope=0

(14 Roof Cover:

(39) Miscellaneous:

(40) Exterior Wall:

	Thickness		Bsmnt Insul.

*** Information herein deemed reliable but not guaranteed***

SKETCH/AREA TABLE ADDENDUM

Parcel No 301NLRD

File No 051-120-2825-278-001

SUBJECT

Property Address 301 NORTH LINCOLN ROAD

City State Zip

Owner

Client

Appraiser Name KEVIN DUBORD Inspection Date DRAWN 1-20-11

IMPROVEMENT SKETCH

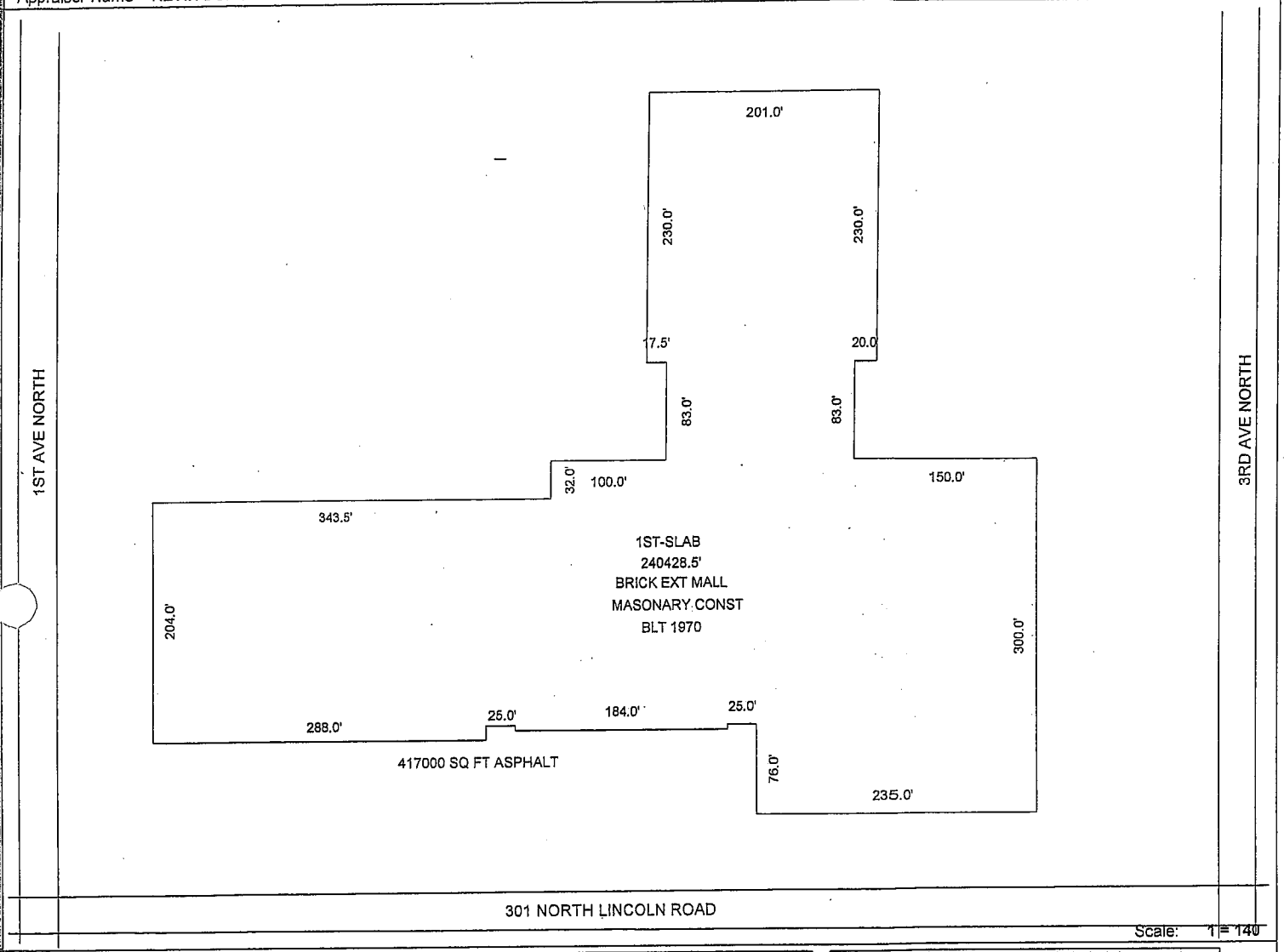

Scale: 1 = 140

AREA CALCULATIONS

AREA CALCULATIONS SUMMARY

Code	Description	Factor	Net Size	Perimeter	Net Totals
GLA1	1ST-SLAB	1.00	240428.5	2847.0	240428.5
Net LIVABLE Area		(rounded w/ factors)			240429

Comment Table 1

Comment Table 2

Comment Table 3

SKETCH/AREA TABLE ADDENDUM

Parcel No 051-120-2825-278-001 File No 301NLR-Land

Property Address 301 NORTH LINCOLN ROAD

City ESCANABA County Delta State MI Zip 49829

Owner AMICUS MANAGEMENT INC

Appraiser Name Daina Norden Drawn Date 12-23-2013

Modified By

IMPROVEMENTS SKETCH

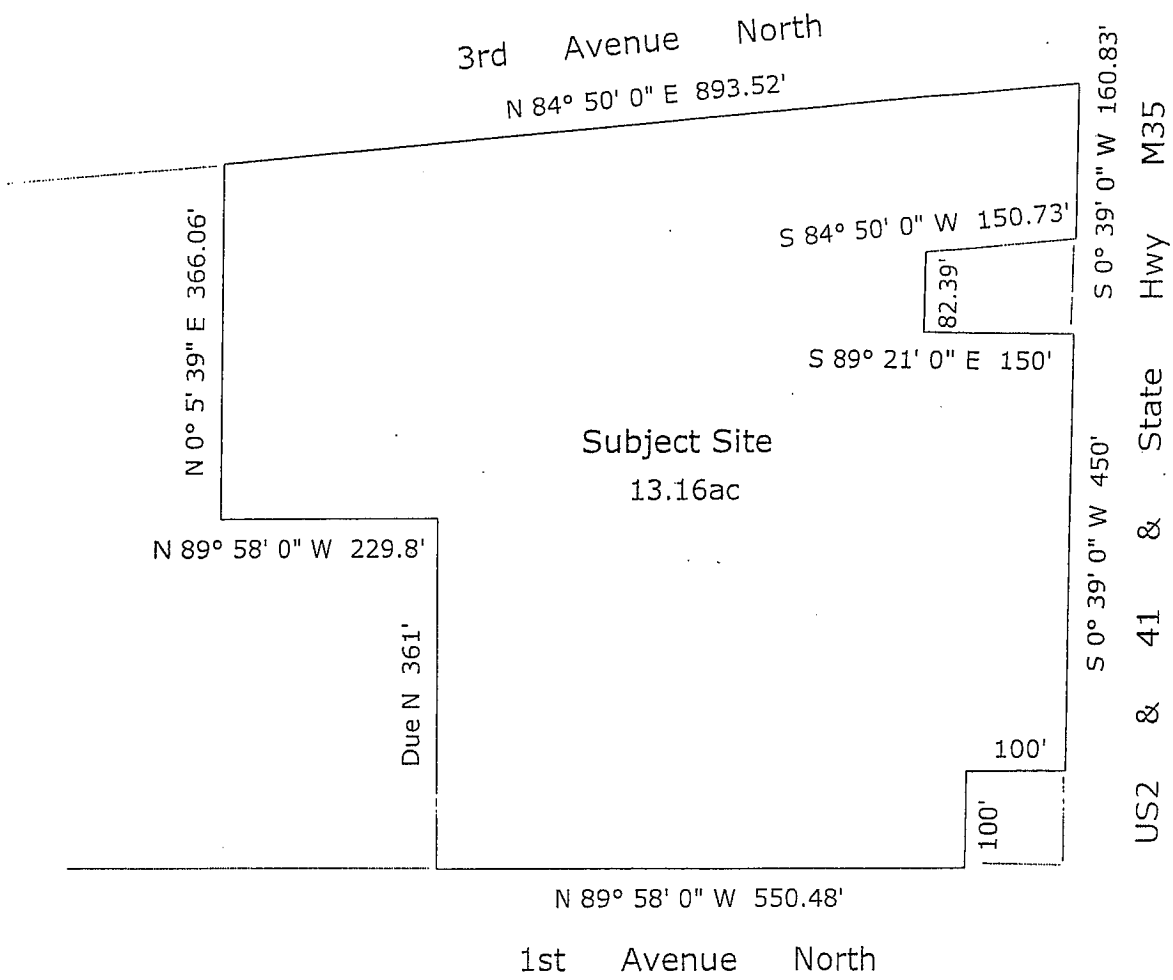

Scale: 1" = 200'

SURVEY DESCRIPTION

Subject Site
Beginning at a point of the Tract described by Metes and Bounds as follows:
THENCE North 89° 58' 0" West, a distance of 550.48 Feet;
THENCE Due North, a distance of 361.00 Feet;
THENCE North 89° 58' 0" West, a distance of 229.80 Feet;
THENCE North 0° 5' 39" East, a distance of 366.06 Feet;
THENCE North 84° 50' 0" East, a distance of 893.52 Feet;
THENCE South 0° 39' 0" West, a distance of 160.83 Feet;
THENCE South 84° 50' 0" West, a distance of 150.73 Feet;
THENCE South 0° 39' 0" West, a distance of 82.39 Feet;
THENCE South 89° 21' 0" East, a distance of 150.00 Feet;
THENCE South 0° 39' 0" West, a distance of 450.00 Feet;
THENCE North 89° 58' 0" West, a distance of 100.00 Feet;
THENCE South 0° 39' 0" West, a distance of 100.00 Feet;
THENCE North 69° 22' 49" West, a distance of 1.16 Feet to point of beginning;
Said tract containing 13.16 acres (573268.06 sf) of land, more or less.
Perimeter = 3595.97 Feet
No significant error of closure.

Parcel Number: 051-20-2825-200-019 Jurisdiction: City of Escanaba County: Delta AC#143-2A Printed on 6/1/2014

Grantor	Grantee	Sale Price	Sale Date	Inst. Type	Terms of Sale	Liber & Page	Verified By	Prcnt. Trans.
AMICUS MANAGEMENT INC	ESCANABA DELTA MALL LLC	3,704,084	02/14/2014	SD	FORECLOSURE	1098/571	DAINA NORDEN	0.0
RUBLOFF DELTA LLC	AMICUS MANAGEMENT INC	0	08/15/2012	JDG	QCD	1054/830		100.0

Property Address	Class: Commercial, 201	Zoning:	Building Permit(s)	Date	Number	Status
2601 3RD AVENUE NORTH	School: Escanaba Schools 21010					
	P.R.E. 0%					
Owner's Name/Address	Map #: 143-2A					
AMICUS MANAGEMENT INC 555 CASCADE WEST PARKWAY SE GRAND RAPIDS MI 49546	2015 Est TCV Tentative					

Tax Description

PRT S 1/2 NE 1/4 SEC 25 T39N R23W COM @ E 1/4 COR TH N 0D 39M E 211.81 FT TH N 89D 14M 40S W 50 FT TO PT ON N ROW 1ST AVE N & W ROW M-35 TH N 89D 58M W 1327.48 FT TO POB TH N 89D 58M W 292.69 FT TO PT 959.15 FT E OF N-S 1/4 LN TH N 0D 02M E 291 FT TH S 89D 58M E 148.69 FT TH N 0D 02M E 382.5 FT TO S ROW 3RD AVE N TH N 84D 50M E ALG 144.58 FT TH S 0D 02M W 686.48 FT TO POB 3.2421 AC M/L AC #143-2A

Comments/Influences

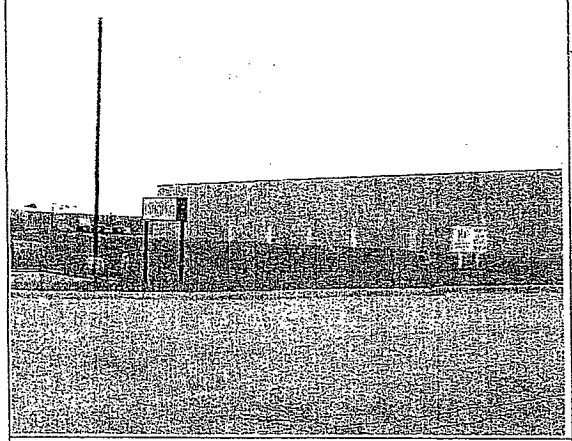

The Equalizer. Copyright (c) 1999 - 2009. Licensed To: City of Escanaba, County of Delta, Michigan

	Improved	X	Vacant

	Public Improvements
	Dirt Road
	Gravel Road
X	Paved Road
X	Storm Sewer
	Sidewalk
X	Water
X	Sewer
X	Electric
X	Gas
X	Curb
X	Street Lights
	Standard Utilities
	Underground Utils.

	Topography of Site
X	Level
	Rolling
	Low
X	High
	Landscaped
	Swamp
	Wooded
	Pond
	Waterfront
	Ravine
	Wetland
	Flood Plain

Who	When	What
TW	04/14/2014	Data Enter
KD	09/20/2011	Inspected
KD	08/22/2008	Inspected

Land Value Estimates for Land Table 2/301.COMERCIAL & INDUSTRIAL

* Factors * 292.69X291 & 144.58X382.5

Description	Frontage	Depth	Front	Depth	Rate	%Adj.	Reason	Value
SQ. FT. PR SECONDARY		141300 SqFt	1.60000		133		TWO RD FRONTS	300,686
		3.24 Total Acres			Total Est. Land Value =			300,686

Year	Land Value	Building Value	Assessed Value	Board of Review	Tribunal/ Other	Taxable Value
2015	Tentative	Tentative	Tentative			Tentative
2014	150,343	0	150,343			150,343S
2013	150,343	0	150,343			150,343S
2012	154,034	0	154,034			144,995C

*** Information herein deemed reliable but not guaranteed***

SKETCH/AREA TABLE ADDENDUM

Parcel No 051-420-2825-200-019 File No 26013AN-LAND

Property Address 2601 3RD AVENUE NORTH

City ESCANABA County Delta State MI Zip 49829

Owner ESCANABA DELTA MALL LLC

Appraiser Name KEVIN DUBORD Drawn Date 6-16-16

Modified By

SUB IMPROVEMENTS SKETCH

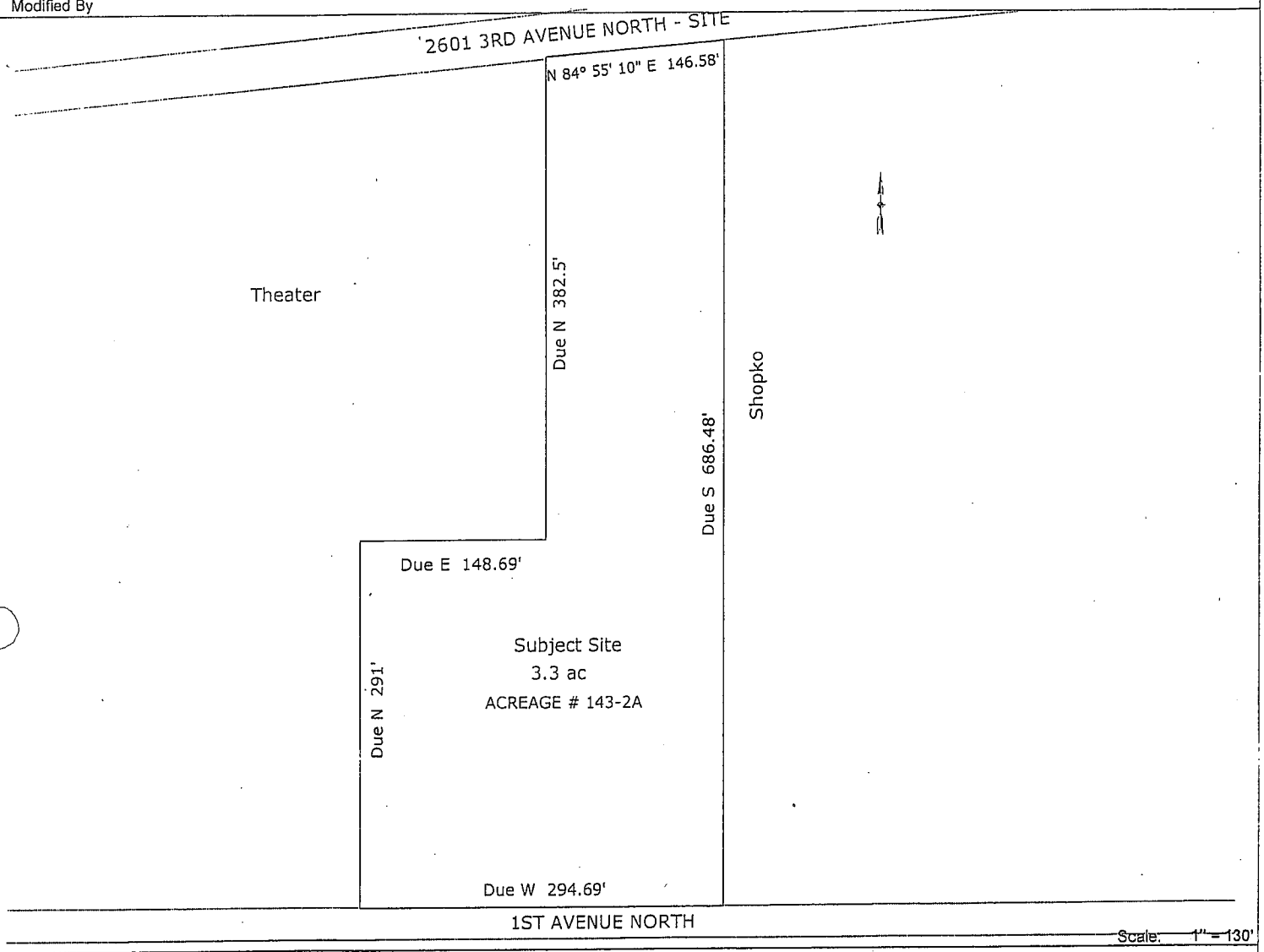

SURVEY DESCRIPTION

Subject Site
Beginning at a point of the Tract described by Metes and Bounds as follows:
THENCE Due South, a distance of 686.48 Feet;
THENCE Due West, a distance of 294.69 Feet;
THENCE Due North, a distance of 291.00 Feet;
THENCE Due East, a distance of 148.69 Feet;
THENCE Due North, a distance of 382.50 Feet;
THENCE North 84° 55' 10" East, a distance of 146.58 Feet to point of beginning;
Said tract containing 3.27 acres (142547.33 sf) of land, more or less.
Perimeter = 1949.94 Feet
No significant error of closure.

SKETCH/AREA TABLE ADDENDUM

Parcel No 051-120-2825-278-001 File No 301NLR-Land

SUBJECT

Property Address 301 NORTH LINCOLN ROAD

City ESCANABA County Delta State MI Zip 49829

Owner AMICUS MANAGEMENT INC

Appraiser Name Daina Norden Drawn Date 12-23-2013

Modified By

IMPROVEMENTS SKETCH

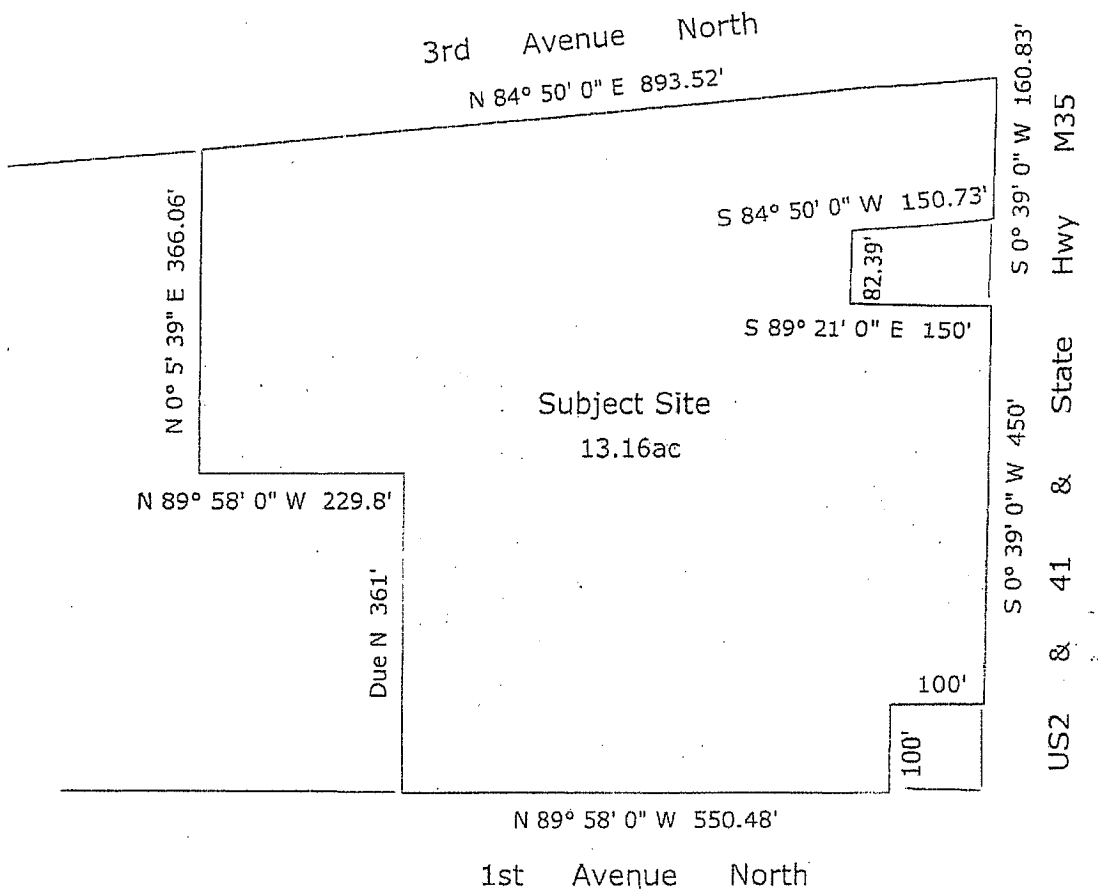

Scale: 1" = 200'

SURVEY DESCRIPTION

Subject Site
Beginning at a point of the Tract described by Metes and Bounds as follows:
THENCE North 89° 58' 0" West, a distance of 550.48 Feet;
THENCE Due North, a distance of 361.00 Feet;
THENCE North 89° 58' 0" West, a distance of 229.80 Feet;
THENCE North 0° 5' 39" East, a distance of 366.06 Feet;
THENCE North 84° 50' 0" East, a distance of 893.52 Feet;
THENCE South 0° 39' 0" West, a distance of 160.83 Feet;
THENCE South 84° 50' 0" West, a distance of 150.73 Feet;
THENCE South 0° 39' 0" West, a distance of 82.39 Feet;
THENCE South 89° 21' 0" East, a distance of 150.00 Feet;
THENCE South 0° 39' 0" West, a distance of 450.00 Feet;
THENCE North 89° 58' 0" West, a distance of 100.00 Feet;
THENCE South 0° 39' 0" West, a distance of 100.00 Feet;
THENCE North 69° 22' 49" West, a distance of 1.16 Feet to point of beginning;
Said tract containing 13.16 acres (573268.06 sf) of land, more or less.
Perimeter = 3595.97 Feet
No significant error of closure.

Obsolete Property Rehabilitation Act Exemption

P.A. 146 of 2000, as amended

Overview

A means to encourage the rehabilitation of obsolete property and to increase commercial/residential housing available in downtowns or other areas characterized by underused or functionally obsolete properties.

OPRA provides property tax exemptions for commercial and commercial housing properties that are rehabilitated and meet the requirements of the Act. The property must be located in a qualified local unit, such as the City of Escanaba and be located in an established Obsolete Property Rehabilitation District. Properties must meet eligibility requirements including a statement of obsolescence by the local assessor. Exemptions are approved for a term of 1-12 years as determined by the local unit of government. The property taxes for the rehabilitated property are based on the previous year's (prior to rehabilitation) taxable value. The taxable value is frozen for the duration of the exemption. Additionally, the State Treasurer may approve reductions of half of the school operating and state education taxes for a period not to exceed 6 years for 25 applications annually. Applications are filed, reviewed and approved by the local unit of government, but are also subject to review at the State level by the Property Services Division. **Exemptions are not effective until approved by the State.**

Functional obsolescence as defined by the state includes inadequate electrical, heating and plumbing. Oversized or undersized rooms, poor layouts and traffic flow problems, etc.

Functionally Obsolete: *means that the property is unable to be used to adequately perform the function for which it was intended due to a substantial loss in value resulting from factors such as overcapacity, changes in technology, deficiencies or super adequacies in design, or other similar factors that affect the property itself or the property's relationship with other surrounding property.*

Antiquated plumbing, heating, and electrical fixtures and connections or spaces that are not conducive to the use of modern equipment and technologies or spaces broken up by poorly planned wall dividers that may have been functional 50 or 100 years ago are examples of deficiencies which could qualify a building. Super adequacies include excessive ceiling height, excessive size, etc. The OPRA legislation requires a statement of obsolescence from a Level III or Level IV certified assessor using this criteria.

Once in the program there will now be three tax bills for the same property. 1) the tax bill on the land taxed at full millage, 2) the taxable value on the building is frozen at the pre-improvement level at full millage, and 3) the tax bill on the improvement which only taxes the School Operating (18 mills) and State Education Tax (6 mills) which could be reduced by ½ by the State Treasurer.

Obsolete Property Rehabilitation Act Exemption

P.A. 146 of 2000, as amended

An example of how the OPRA affects property taxes for property with an exemption. Using the 2013 millage rates for the City of Escanaba, the annual rates would be as follows:

School Oper.	=	18.0000 mills
State Ed Tax	=	6.0000 mills
TOTAL Millage	=	59.8744 mills

The taxable value of the parcel prior to the exemption is $70,000. Of the total taxable value, assume that $20,000 is the portion attributable to the land. Assume also that rehabilitation and remodeling result in a total taxable value of $1,200,000 for the rehabbed property. The tax breakdown would be as follows:

Annual Tax Bill	Taxable Value		Millage		Annual Tax Dollars
1) Land	20,000	X	59.8744	=	$ 1,197
2) Frozen Building TV	50,000	X	59.8744	=	$ 2,943
3) Non-frozen TV	1,130,000	X	*18.0000	=	$ 27,120
	1,130,000	X	*6.0000	=	
			Total Annual Tax	**=**	**$ 31,260**

Annual Tax Without Exemption	*$ 71,849*
Annual Savings	*$ 40,589*
Savings Over 12-year term	*$ 487,071*

* The State Treasurer can exempt up to 50% of the State Education Tax and the school operating tax for a period of up to 6 years, which would result in additional annual savings of $13,560 or $81,360 for the term of the exemption.

The OPRA exemption applies only to existing buildings. Taxable value attributable to increased building size, whether vertical or horizontal, is taxed at the full millage rate.

Additionally, if the rehabbed property is commercial/residential, any portion which qualifies as primary residence would be exempted from the 18 mills of school operating tax, in the same manner as any other homestead.

The entire process is set by statute.

Unlike other exemptions, OPRA exemptions can be transferred to new property owners. The exemption can be transferred to a new owner during or after rehabilitation with the approval of the city council. The process starts at the local assessor's office.

Obsolete Property Rehabilitation Act Exemption

P.A. 146 of 2000, as amended

Definitions Contained In or Referenced In Pubic Act 146 of 2000

"Commercial housing property" means that portion of real property not occupied by an owner of that real property that is classified as residential real property under section 34c of the general property tax act, 1893 PA 206, MCL 211.34c, is a multiple-unit dwelling, or is a dwelling unit in a multiple-purpose structure, used for residential purposes. Commercial housing property also includes a building or group of contiguous buildings previously used for industrial purposes that will be converted to a multiple-unit dwelling or dwelling unit in a multiple-purpose structure, used for residential purposes.

"Commercial property" means land improvements classified by law for general ad valorem tax purposes as real property including real property assessable as personal property pursuant to sections 8(d) and 14(6) of the general property tax act, 1893 PA 206, MCL 211.8 and MCL 211.14, the primary purpose and use of which is the operation of a commercial business enterprise. Commercial property shall also include facilities related to a commercial business enterprise under the same ownership at that location, including, but not limited to, office, engineering, research and development, warehousing, parts distribution, retail sales, and other commercial activities. Commercial property also includes a building or group of contiguous buildings previously used for industrial purposes that will be converted to the operation of a commercial business enterprise or a multiple-unit dwelling or a dwelling unit in a multiple-purpose structure, used for residential purposes. Commercial property does not include any of the following:Land, Property of a utility

"Facility", except as otherwise provided in this act, means a building or group of contiguous buildings.

"Functionally obsolete" means that the property is unable to be used to adequately perform the function for which it was intended due to a substantial loss in value resulting from factors such as overcapacity, changes in technology, deficiencies or superadequacies in design, or other similar factors that affect the property itself or the property's relationship with other surrounding property. (See MCL 125.2652)

Note: The STC offers the following as examples of functional obsolescence:

1) A floor plan which is inappropriate for the highest and best use of the property.
2) A heating system which is inadequate for the highest and best use of the property.
3) Excessively high or low ceilings for the highest and best use of the property.
4) Partition walls which restrict the highest and best use of the property.
5) Mechanical systems (e.g. electrical, plumbing, etc) which are inadequate for the highest and best use of the property.

"Obsolete property" means commercial property or commercial housing property, that is 1 or more of the following:

(i) "Blighted property". Blighted property means property that meets 1 or more of the following criteria:

a. Has been declared a nuisance in accordance with a local housing, building, plumbing, fire, or other related code or ordinance.
b. Is an attractive nuisance to children because of physical condition, use, or occupancy.

Obsolete Property Rehabilitation Act Exemption

P.A. 146 of 2000, as amended

c. iii.Is a fire hazard or is otherwise dangerous to the safety of persons or property.
d. iv.Has had the utilities, plumbing, heating, or sewerage permanently disconnected, destroyed, removed, or rendered ineffective so that the property is unfit for its intended use.
e. v. Is tax reverted property owned by a qualified local governmental unit, by a county, or by this state. The sale, lease, or transfer of tax reverted property by a qualified local governmental unit, county, or this state after the property's inclusion in a brownfield plan shall not result in the loss to the property of the status as blighted property for purposes of PA 145 of 2000.(MCL 125.2652)

(ii) A facility as that term is defined below:
"Facility" as defined in PA 451 of 1994 means any area, place, or property where a hazardous substance in excess of the concentrations which satisfy the requirements of section 20120a(1)(a) or (17) or the cleanup criteria for unrestricted residential use under part 213 has been released, deposited, disposed of, or otherwise comes to be located. Facility does not include any area, place, or property at which response activities have been completed which satisfy the cleanup criteria for the residential category provided for in section 20120a(1)(a) and (17) or at which corrective action has been completed under part 213 which satisfies the cleanup criteria for unrestricted residential use. (See MCL 324.20101)

(iii) Functionally obsolete. Please see the definition of "functionally obsolete".

"Obsolete property rehabilitation district" means an area of a qualified local governmental unit established as provided in section 3. Only those properties within the district meeting the definition of "obsolete property" are eligible for an exemption certificate issued pursuant to section 6 of PA 146 of 2000.

"Rehabilitation" means changes to obsolete property OTHER THAN REPLACEMENT that are required to restore or modify the property, together with all appurtenances, to an economically efficient condition. Rehabilitation includes major renovation and modification including, but not necessarily limited to, the improvement of floor loads, correction of deficient or excessive height, new or improved fixed building equipment, including heating, ventilation, and lighting, reducing multistory facilities to 1 or 2 stories, improved structural support including foundations, improved roof structure and cover, floor replacement,
improved wall placement, improved exterior and interior appearance of buildings, and other physical changes required to restore or change the obsolete property to an economically efficient condition. **Rehabilitation shall not include improvements aggregating less than 10% of the true cash value of the property at commencement of the rehabilitation of the obsolete property.**

"Rehabilitated facility" means a commercial property or commercial housing property that has undergone rehabilitation or is in the process of being rehabilitated, including rehabilitation that changes the intended use of the building. A rehabilitated facility does not include property that is to be used as a professional sports stadium. A rehabilitated facility does not include property that is to be used as a casino. As used in this subdivision, "casino" means a casino or a parking lot, hotel, motel, or retail store owned or operated by a casino, an affiliate, or an affiliated company, regulated by this state pursuant to the Michigan gaming control and revenue act, the Initiated Law of 1996, MCL 432.201 to 432.226.

Obsolete Property Rehabilitation Act Exemption

P.A. 146 of 2000, as amended

City of Escanaba Application Process

These are the steps to follow if you wish to apply for an Obsolete Properties Rehabilitation Exemption (OPRA exemption):

1. **Request in writing** to the city assessor that an Obsolete Properties Rehabilitation District be established for your property. City Council will approve this by resolution. Do not begin structural or cosmetic improvements to the building until after the district is established by City Council. This process may take four to six weeks.

2. **Request that the city assessor inspect** your building to determine if the property qualifies as obsolete property under the legislation. This can be done before council acts on your request for an OPRA district.

3. **Complete the application form and addendum** provided by the city assessor. You must include a letter stating that the rehabilitation project could not be completed without the assistance of the exemption (required by statute). Also include cost estimates of your planned projects and approximate completion schedules. Be as specific as possible. The assessor will bring this before Escnaaba City Council and a public hearing will be held to consider your exemption. This process will take an additional four to six weeks.

4. **If approved by City Council the assessor will then send** required documents to the State of Michigan for review and approval/disapproval by the State Tax Commission. Please note that the STC must receive the application by October 1st to consider the exemption for the next year's taxes. In order to maintain the necessary timetable, your district request should be started by the end of June with the completed exemption application submitted by the first (1st) Thursday of September. An OPRA exemption granted by the state on or before December 31st of any year will take effect in the following tax year.

NOTE:

An OPRA exemption will result in three separate tax bills for the exempt parcel: 1) land is assessed and taxed normally, 2) the frozen taxable value for all levies 3) "Non-frozen taxable value" means that the increased taxable value resulting from project improvements will be taxed only the School Operating (18 mills) and State Education Tax (6 mills) which may be reduced by ½ by the State Treasurer for up to 6 years.

You must pay property taxes timely. Failure to pay taxes before they become delinquent on March 1st of each year may constitute a reason for revoking the exemption.

A Principal Residence Exemption may apply If you rehabilitate the upper floor(s) of your property into your primary residence.

City of Escanaba
Phone: (906) 786-9402
Email: dnorden@escanaba.org

NB#1 CC 7/21/16

Water Department

Memo

To: **Jim O'Toole, City Manager**

From: Jeff Lampi, W & WWTP Supt.

Date: 7/11/16

Re: Small Water Meter Purchase

Jim:

As a means of making water meter purchasing more economical, we have asked our venders to bid our entire year needs at one time.

Attached you will find the complete bid tabulation and all back up the vendors provided in their bids. I would like to recommend purchasing the Zenner MJ brand of meters from United Systems & Software, along with the 100W Itron ERT attached. The Zenner is the less expensive brand that was bid, and has been given high ranking as it's #3 in sales in Europe. Combined with the Itron 100W ERT, the Water Department will be on track to pursue either AMI or AMR metering in the future.

United Systems & Software, Inc; Benton, KY

~450 5/8 x 1/2 Zenner MJ water meters	$38,250.00
~450 Itron 100W ERTS	$33,750.00
	$72,000.00
~assortment of 3/4" & 1" Zenner MJ water meters with Itron 100W ERT's as determined by the needs of the City.	**>$8,000.00**
Total purchase of small water meters	**$80,000.00**

With your approval I would like to award the water meter bid to United Systems & Software, Inc; of Benton KY to provide new un-used AWWA approved water meters, of various sizes, along with 100 W Itron ERT's as per the specifications' listed in the Bid at a cost not to exceed **$80,000.00.** Money has been budgeted for this activity.

Pc: Melissa Becotte, City Controller

METERS

CITY OF ESCANABA

2016-2017 Water Fund Budget Request Workpaper

Fund Number 333 Activity Number 000

REQUEST FOR CAPITAL EXPENDITURES

		Description of Request	Actual 2013-14	Actual 2014-15	Estimate 2015-16	Budget 2015-16	Request 2016-17	Recommended 2016-17	Final 2016-17	$ Change Col. 7-Col. 4	% Change Col. 7-Col. 4
		VFD on Influent Pumps				18,000	0	0	0	(18,000)	-100.00%
		Boiler System Replacement/Upgrade				50,000	0	0	0	(50,000)	-100.00%
		Breakroom Expansion / Bathroom Relocation				15,000	0	0	0	(15,000)	-100.00%
		Roof Ladders / Fall Protection				6,000	0	0	0	(6,000)	-100.00%
		Replace Cl2 Regulators & Ejectors				20,000	20,000	20,000	20,000	0	0.00%
541-136	-000	Structures and Improvements	0	3,450	22,000	109,000	20,000	20,000	20,000	(89,000)	-81.65%
		pH Meter				0	0	0	0	0	0.00%
541-140	-608	Laboratory Equipment	0	1,307	0	0	0	0	0	0	0.00%
		Pipe Boring Machine & Push Box (Share with Electric Dept)				30,000	0	0	0	(30,000)	-100.00%
		Small Hydrant Pipe				600	0	0	0	(600)	-100.00%
		Electric Pallet Jack				6,000	0	0	0	(6,000)	-100.00%
541-140	-612	Tools & Equipment	8,348	0	3,400	36,600	0	0	0	(36,600)	-100.00%
		Computer Upgrades				0	0	0	0	0	0.00%
541-146	-100	Office Equipment & Furniture	2,124	0	0	0	0	0	0	0	0.00%
		GIS Water System				0	33,000	30,000	30,000	30,000	NEW
		Replace Service Lines				10,000	10,000	10,000	10,000	0	0.00%
		Install Mixers in Water Towers				0	80,000	80,000	80,000	80,000	NEW
		Leak Detection				0	30,000	30,000	30,000	30,000	NEW
541-152	-00X	Transmission/Distribution Mains	1,200	0	8,000	10,000	153,000	150,000	150,000	140,000	1400.00%
		New Meters				40,000	80,000	130,000	130,000	90,000	225.00%
		Large Meter Replacement				20,000	20,000	20,000	20,000	0	0.00%
		City Wide Meter Replacement				0	450,000	0	0	0	0.00%
541-152	-005	Meters	52,580	61,650	60,000	60,000	550,000	150,000	150,000	90,000	150.00%
		TOTAL CAPITAL OUTLAY	64,252	66,407	93,400	215,600	723,000	320,000	320,000	104,400	48.42%

CITY OF ESCANABA
RECORD OF BIDS

DATE BIDS OPENED: 6/28/2016

DESCRIPTION OF ITEM: Escanaba WTP Water Meters

NAME OF BIDDER	METER SIZE	METER BRAND & MODEL	METER COST	60W ITRON ERT OR 100W ITRON ERT	COST OF ITRON ERT	OTHER MEANS OF REMOTE READ	COST OF REMOTE READ	CHECK OR BID BOND
Badger Meter								No Bid
Border State Electric	5/8x1/2	Mueller Model 420	99					Bond
" "	3/4x3/4	Mueller Model 435	124					
" "	1x1	Mueller Model 452	188					
" "	60W	Itron ERT			69			
" "	100W	Itron ERT			99			
Etna Supply	5/8x1/2	Sensus Accustream	95					Bond
" "	5/8x1/2	Sensus I Perl	125					
" "	3/4x3/4	Sensus Accustream	140					
" "	3/4x3/4	Sensus I Perl	150					
" "	1x1	Sensus Accustream	125					
" "	1x1	Sensus I Perl	190					

PRESENT: [illegible]

CITY OF ESCANABA
RECORD OF BIDS

DATE BIDS OPENED: 6/28/2016

DESCRIPTION OF ITEM: Escanaba WTP Water Meters

NAME OF BIDDER	METER SIZE	METER BRAND & MODEL	METER COST	60W ITRON ERT OR 100W ITRON ERT	COST OF ITRON ERT	OTHER MEANS OF REMOTE READ	COST OF REMOTE READ	CHECK OR BID BOND
MICH Meter	5/8x1/2	Neptune T-10	96.30					Check #4,815
	3/4x3/4	Neptune T-10	135					
	1x1	Neptune T-10	192.60			Neptune Wall Mount Touch Pad	$0	
SLC Meter	5/8x1/2	Badger Model 25 Polymer	96.13					Bond
	5/8x1/2	Badger Model 4P Brass	98.44					
	3/4x3/4	Badger Model 25L Polymer	100.58					
	3/4x3/4	Badger Model 35 Brass	137.61					
	1x1	Badger Model 40 Polymer	155.89					
	1x1	Badger Model 55 Brass	181.14					
	60W	Itron ERT	~~141.72~~		141.72			
	100W	Itron ERT			141.72			
						Badger Cellular	208.00	

PRESENT:

CITY OF ESCANABA
RECORD OF BIDS

DATE BIDS OPENED: 6/28/2016

DESCRIPTION OF ITEM: Escanaba WTP Water Meters

NAME OF BIDDER	METER SIZE	METER BRAND & MODEL	METER COST	60W ITRON ERT OR 100W ITRON ERT	COST OF ITRON ERT	OTHER MEANS OF REMOTE READ	COST OF REMOTE READ	CHECK OR BID BOND
United Systems	5/8x1/2	Mueller 420 Poly	94					Bond
	5/8x1/2	Zenner MJ	85					
	5/8x1/2	Kamstrup Flow IQ 2100	119					
	3/4x3/4	Mueller 420 Poly	119					
	3/4x3/4	Zenner MJ	112					
	3/4x3/4	Kamstrup Flow IQ 2100	143					
	1x1	Mueller Bronze 4521 15	179.95					
	1x1	Zenner MJ	137					
	1x1	Kamstrup Flow IQ 2101	285					
	60W	Itron ERT			65			
	100W	Itron ERT			75			

PRESENT:

ZENNER
PERFORMANCE
All that counts.

MODEL		PMN01	PMN02	PMN03	PMN04	PMN05	PMN07	PMN08	PMN09	PMN11	PMN12
SIZE		5/8 x 1/2	5/8 x 3/4	3/4" Short	3/4" x 3/4"	3/4" x 1"	1"	1-1/2" Female Threads	1-1/2" Flanged	2" Female Threads	2" Flanged
High Flow Rate	USGPM	20	20	30	30	30	50	100	100	160	160
Continuous Flow	USGPM	10	10	15	15	15	25	50	50	80	80
Starting Flow	USGPM	3/64	3/64	5/64	5/64	5/64	5/64	1/2	1/2	3/4	3/4
Normal Flow	USGPM	1 - 20	1 - 20	2 - 30	2 - 30	2 - 30	3 - 50	5-100	5-100	8-160	8-160
Low Flow	USGPM	1/4	1/4	1/2	1/2	1/2	3/4	1 1/2	1 1/2	2	2
Extreme High Flow (Intermittent)	USGPM	25	28	32	32	32	60	120	120	180	180
Maximum Working Pressure	P.S.I.	150	150	150	150	150	150	150	150	150	150
Maximum Temperature	Deg. F	122	122	122	122	122	122	122	122	122	122
Length	Inches	7 1/2	7 1/2	7 1/2	9	9	10 3/4	12 5/8	13	15 1/4	17
Length with Couplings	Inches	12 1/2	12 1/2	12 1/2	14 1/2	14 1/2	16 1/2	-	-	-	-
Height	Inches	4 3/4	4 3/4	4 3/4	4 3/4	4 3/4	5	7	7	7	7
Weight	Pounds	4.5	4.5	4.5	6	6.3	7	15	20	21	25

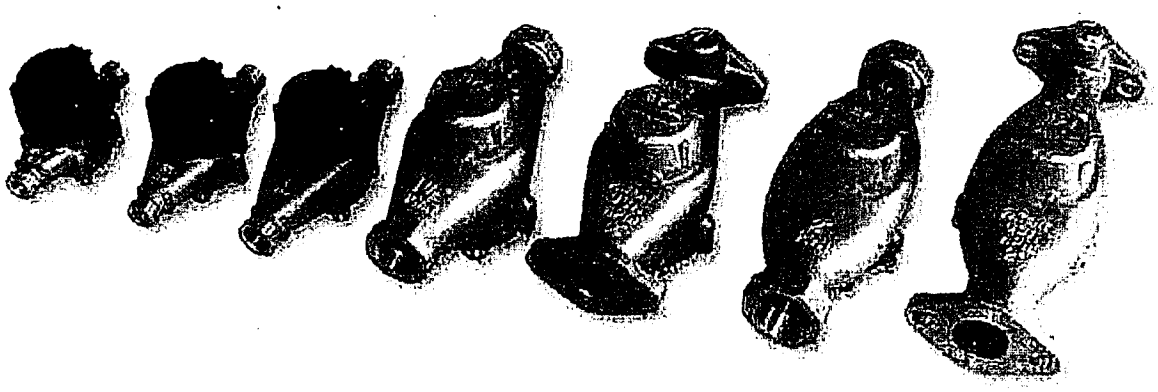

ZENNER PERFORMANCE
P.O. BOX 895, Banning, CA 92220, (951) 849-8822, Fax (951) 755-8816
mail@zennerusa.com, www.zennerusa.com

ZENNER PERFORMANCE
All that counts

ZENNER PERFORMANCE
Multi-Jet Type Magnetic Drive Cold Water Meters

Typical Performance Curves

HEAD LOSS CURVE
5/8" PMN01 and PMN02

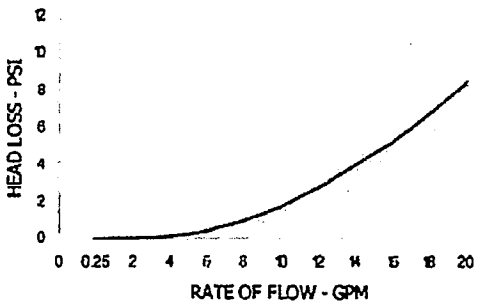

ACCURACY CURVE
5/8" PMN01 and PMN02

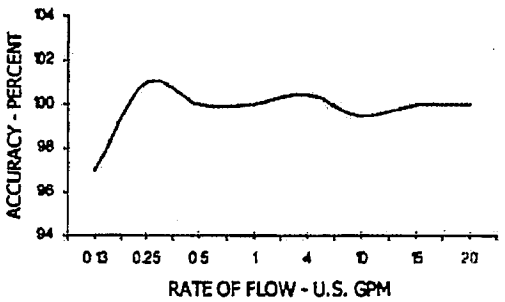

HEAD LOSS CURVE
3/4" PMN03, PMN04 and PMN05

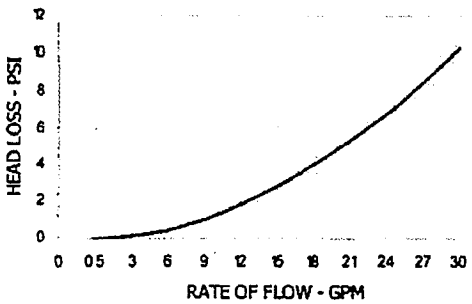

ACCURACY CURVE
3/4" PMN03, PMN04 and PMN05

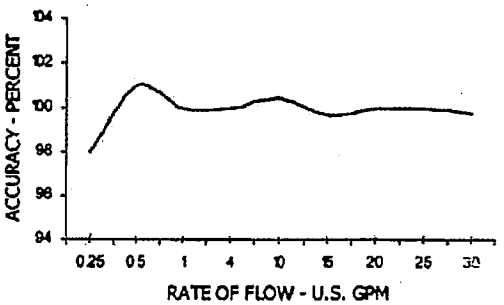

HEAD LOSS CURVE
1" PMN07

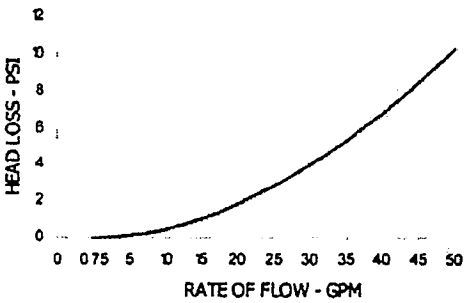

ACCURACY CURVE
1" PMN07

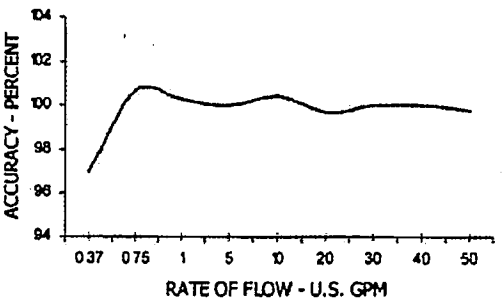

ZENNER PERFORMANCE
P.O. Box 895 | Banning, CA 92220 | phone (951) 849-8822 | fax (951) 755-8816
mail@zennerusa.com | www.zennerusa.com

ZENNER
PERFORMANCE
All that counts

ZENNER PERFORMANCE
Multi-Jet Type Magnetic Drive Cold Water Meters

HEAD LOSS CURVE
1-1/2" PMN08 AND PMN09

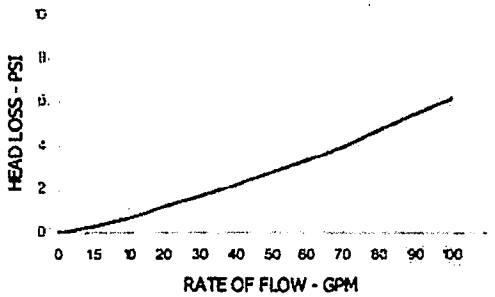

ACCURACY CURVE
1-1/2" PMN08 AND PMN09

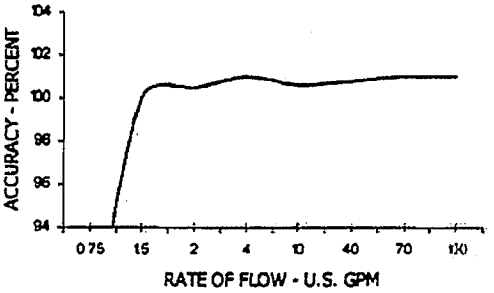

HEAD LOSS CURVE
2" PMN11 AND PMN12

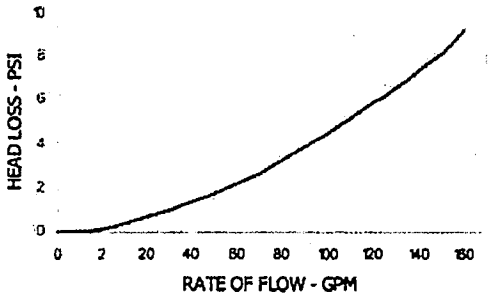

ACCURACY CURVE
2" PMN11 AND PMN12

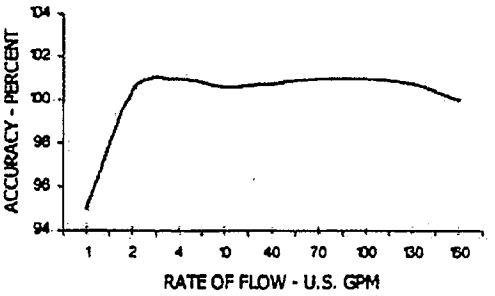

ZENNER PERFORMANCE
P.O. Box 895 | Banning, CA 92220 | phone (951) 849-8822 | fax (951) 755-8816
mail@zennerusa.com | www.zennerusa.com

ZENNER
PERFORMANCE
All that counts.

TECHNICAL BRIEF

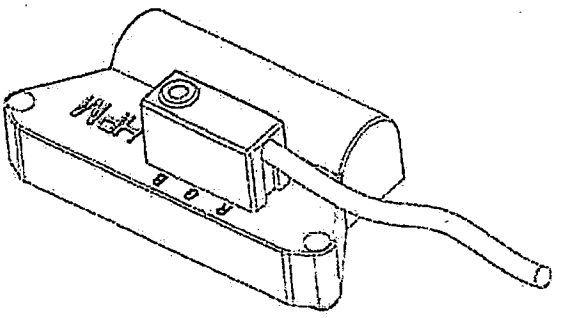

APPLICATION: The Encoded Type Register (ETR) is designed for use with all ZENNER PERFORMANCE registers.

MOUNTING: The ETR mounts onto the Nitro I, Nitro II, Econo II and PMT series Register housings. Two screws with tamper seals are provided to allow mounting to the register housing. The ETR can be removed from the meter without disrupting water service.

MAGNETIC PICKUP: Magnetic pickup from the register pointer ensures reliable positive readings.

SEALED ETR: The ETR is completely sealed and approved for pit conditions.

CONSTRUCTION: The housing of the ETR is constructed of an environmentally safe plastic and resin. Internal construction materials are designed for long-life and reliability. The potting compound provides an impenetrable barrier against water and natural contaminants.

TEMPERATURE: The operating range of the ETR is -20° C to 76° C (-4° F to 169°F). The water meter should not be exposed to temperatures below freezing.

WIRE CONNECTIONS: The ETR is provided as a factory pre-wired assembly or an individual unit that can be wired in the field. Length of the connecting wires is limited by the limitations of the connected AMR device.

TAMPER-PROOF FEATURES: Customer removal of the ETR can be detected by a built in electronic feature of the unit.

ELECTRONCS: The circuit board is completely sealed against moisture and humidity.

OPERATING CHARACTERISTICS: The ETR has an output every revolution of the pointer. The ETR generates one count for every rotation of the sweep hand. It will not decrement the count with reverse rotation, and will internally count up to 5 consecutive reverse rotations. This feature is provided to ensure that if a forward rotation is followed by a reverse rotation, the reverse flow will not cause the forward flow to be counted twice. A maximum of 5 consecutive reverse rotations is allowed for.

ZENNER PERFORMANCE
P.O. BOX 895, Banning, CA 92220, (951) 849-8822, Fax (951) 755-8816
mail@zennerusa.com, www.zennerusa.com

ZENNER
PERFORMANCE
All that counts.

TECHNICAL BRIEF

MODE: The ETR can be configured in one of two modes of operation from the factory. AMR solution uses three wires. The Digital Switch solution uses two wires.

- **• Encoded Mode (Using Three Wires) Sensus Compatible.**

  Connections for the ETR are clearly marked R = Red G = Green, and B = Black for Encoded Mode Operation.

- **• Digital Switch Output Mode (Using Two Wires)**

  The digital output is an 'open-collector' transistor between the Green and Black terminals. The black terminal is to be attached to the ground, or most negative terminal of the switch counter and the Green terminal to the input, or most positive terminal of the switch counter. The maximum current that the ETR output can switch is 20mA. The active signal is on for 50ms.

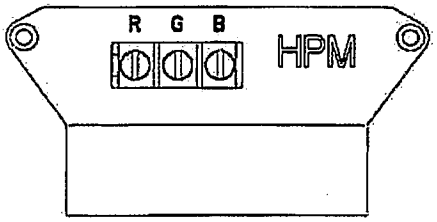

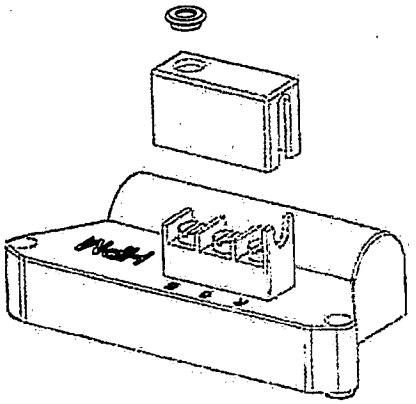

SPECIFICATIONS

Terminals Three

Weight 3 oz.

Temperature -20° C to 76° C (-4° F to 169°F)

Signal Output Industry Standard ASCII Format or Digital Output

Signal Type Two wire asynchronous for touch Solutions. Three wire synchronous for AMR Solutions.

Power Source Internal battery with 15 plus years lifetime.

ZENNER PERFORMANCE
P.O. BOX 895, Banning, CA 92220, (951) 849-8822, Fax (951) 755-8816
mail@zennerusa.com, www.zennerusa.com

ZENNER
PERFORMANCE
All that counts.

Zenner Performance Meters, Inc.
Warranty for Multi-jet and Positive Displacement Water Meters

This warranty shall apply to ZENNER PERFORMANCE Multi-Jet and Positive Displacement Water Meters models PM, PME, PMN & PPD (collectively the "Water Meters") used to measure potable water and the registers.

This warranty shall be effective for all Water Meters shipped on or after November 1, 2011. This warranty is only extended to municipalities, utilities, other commercial users and ZENNER PERFORMANCE Meter, Inc. ("ZENNER PERFORMANCE") distributors, hereinafter referred to as "Customers".

Materials and Workmanship
ZENNER PERFORMANCE warrants its Water Meters and Components thereto free from defects in materials and workmanship, occurring within the earlier of the following time periods:

Non-Remote Register
Twenty-five (25) years from date of installation or twenty-five (25) years and six (6) months from date of shipment.

ETR Encoders Supplied with the Water Meters Described Herein
Ten (10) years from date of installation or ten (10) years and six (6) months from date of shipment

AWWA Meter Accuracy
ZENNER PERFORMANCE warrants that in normal, potable water systems, its Water Meters will meet or exceed AWWA new meter accuracy standards for within the following timeframes:

5/8"	Fifteen (15) years from date of sale or 1,500,000 gallons, whichever occurs first;
3/4"	Fifteen (15) years from date of sale or 2,250,000 gallons, whichever occurs first;
1"	Fifteen (15) years from date of sale or 3,000,000 gallons, whichever occurs first;
1-1/2"	Ten (10) years from the date of sale or 6,000,000 gallons, whichever occurs first;
2"	Ten (10) years from the date of sale or 8,000,000 gallons, whichever occurs first.

Water Meter or Component Returns
ZENNER PERFORMANCE's liability hereunder is expressly limited to the repair or replacement of the Water Meter or Components thereto at ZENNER PERFORMANCE's option, upon the Customer's return of the meter and the components thereto. The Customer must ship the meter and components thereto prepaid F.O.B. to the service center designated by ZENNER PERFORMANCE. The Customer is responsible for all direct and indirect costs associated with removing the meter and the components thereto and reinstalling the repaired or replacement meter or components. The replaced meter and components thereto become the property of ZENNER PERFORMANCE.

ZENNER PERFORMANCE
15280 Addison Rd. Suite 100, Addison, Texas 75001 (888) 766-1253, Fax (972) 386-7711
www.zennerusa.com

Liability Limits
This warranty shall be null and void if the Water Meter or Components are repaired or altered by any party other than ZENNER PERFORMANCE. This warranty is applicable only to the extent that the Water Meter and the Components are installed, serviced and operated in accordance with ZENNER PERFORMANCE's instructions. This warranty shall not apply to any meter or component damaged by, or subject to, conditions which in ZENNER PERFORMANCE's opinion have caused an adverse effect upon the meter's or component's ability to perform, including but not limited to: improper or unauthorized installation, service, or modifications, excessive operating conditions, vandalism, acts of God or any cause other than inherent manufacturing defects in the Water Meter or Components thereto.

THE FOREGOING WARRANTY IS EXCLUSIVE AND IN LIEU OF ALL OTHER WARRANTIES OR GUARANTEES, EXPRESS, IMPLIED OR STATUTORY WITH RESPECT TO QUALITY, MERCHANTABILITY OR FITNESS FOR A PARTICULAR PURPOSE OR OTHERWISE. Any advertisements or suggestions made by ZENNER PERFORMANCE or ZENNER PERFORMANCE's agents relating to use, application, or suitability of the Water Meters or Components thereto shall not be construed as an express warranty unless confirmed in writing by ZENNER PERFORMANCE. Exclusion of Consequential Damages and Disclaimer of Other Liability.

ZENNER PERFORMANCE's liability shall in no event exceed the contract price. ZENNER PERFORMANCE shall not be subject to and disclaims: (1) ANY OTHER OBLIGATIONS OR LIABILITIES ARISING OUT OF BREACH OF CONTRACT OR OF WARRANTY, (2) ANY SERVICES RENDERED BY ZENNER PERFORMANCE, OR ANY UNDERTAKINGS, ACTS, OR OBLIGATIONS WHATSOEVER ARISING FROM TORT CLAIMS (INCLUDING NEGLIGENCE AND STRICT LIABILITY) OR ARISING UNDER OTHER THEORIES OF LAW WITH RESPECT TO PRODUCTS SOLD OR OMISSIONS RELATING THERETO, AND (3) ALL CONSEQUENTIAL, INCIDENTAL, SPECIAL, MULTIPLE, EXEMPLARY, AND PUNITIVE DAMAGES WHATSOEVER.

Due to continuous research, evolving technology, updates and improvements, ZENNER PERFORMANCE reserves the right to change product or system specifications without notice, except to the extent an outstanding contractual ob ligation exists.

ZENNER PERFORMANCE
15280 Addison Rd. Suite 100, Addison, Texas 75001 (888) 766-1253, Fax (972) 386-7711
www.zennerusa.com

ZENNER
PERFORMANCE
All that counts.

Zenner Performance Meters, Inc.
Warranty for Bronze and Cast Iron Turbine Water Meters

This warranty shall apply to Performance Bronze and Cast Iron Turbine Water Meters, models PMT and PMTB (collectively the "Water Meters") used to measure potable water and the registers, generators and ERT encoders (collectively the "Components") used with these Water Meters. This warranty shall be effective for all Water Meters shipped on or after January 1, 2008. This warranty is extended only to municipalities, utilities, other commercial users and Zenner Performance Meters, Inc. ("Zenner Performance") distributors, hereinafter referred to as "Customers".

Materials and Workmanship

When used in normal potable systems and installed with an appropriate strainer on the inlet side of the meter. Zenner Performance warrants its Water Meters and Components thereto free from defects in materials and workmanship, occurring within the earlier of the following time periods:

Non-Remote Register

Twenty-five (25) years from date of installation or twenty-five (25) years and six (6) months from date of shipment.

ETR® Encoders Supplied with the Water Meters Described Herein

Ten (10) years from date of installation or ten (10) years and six (6) months from shipment.

AWWA Meter Accuracy

Zenner Performance 1-1/2" to 8" bronze body and 2" to 20" cast iron turbine Water Meters are warranted to meet or exceed AWWA new meter accuracy standards and to be free from defects in materials and workmanship for a period of eighteen (18) months from the date of shipment.

Water Meter or Component Returns

Zenner Performance's liability hereunder is expressly limited to the repair or replacement of the Water Meter or Components thereto at Zenner Performance's option, upon the Customer's return of the meter and the components thereto. The Customer must ship the meter and components thereto prepaid F.O.B. to the service center designated by Zenner Performance. The Customer is responsible for all direct and indirect costs associated with removing the meter and the components thereto and reinstalling the repaired or replacement meter or components. The replaced meter and components thereto become the property of Zenner Performance.

Liability Limits

This warranty shall be null and void if the Water Meter or Components are repaired or altered by any party other than Zenner Performance. This warranty is applicable only to the extent that the Water Meter and the Components are installed, serviced and operated in accordance with Zenner Performance's instructions. This warranty shall not apply to any meter or component damaged by, or subject to, conditions which in Zenner Performance's opinion have caused an adverse effect upon the meter's or component's ability to perform, including but not limited to: improper or unauthorized installation, service, or modifications, excessive operating conditions, vandalism, acts of God or any cause other than inherent manufacturing defects in the Water Meter or Components thereto.

THE FOREGOING WARRANTY IS EXCLUSIVE AND IN LIEU OF ALL OTHER WARRANTIES OR GUARANTEES, EXPRESS, IMPLIED OR STATUTORY WITH RESPECT TO QUALITY, MERCHANTABILITY OR FITNESS FOR A PARTICULAR PURPOSE OR OTHERWISE. Any advertisements or suggestions made by Zenner Performance or Zenner Performance's agents relating to use, application, or suitability of the Water Meters or Components thereto shall not be construed as an express warranty unless confirmed in writing by Zenner Performance.

Exclusion of Consequential Damages and Disclaimer of Other Liability. Zenner Performance's liability shall in no event exceed the contract price. Zenner Performance shall not be subject to and disclaims: **(1) ANY OTHER OBLIGATIONS OR LIABILITIES ARISING OUT OF BREACH OF CONTRACT OR OF WARRANTY, (2) ANY SERVICES RENDERED BY ZENNER PERFORMANCE, OR ANY UNDERTAKINGS, ACTS, OR OBLIGATIONS WHATSOEVER ARISING FROM TORT CLAIMS (INCLUDING NEGLIGENCE AND STRICT LIABILITY) OR ARISING UNDER OTHER THEORIES OF LAW WITH RESPECT TO PRODUCTS SOLD OR OMISSIONS RELATING THERETO, AND (3) ALL CONSEQUENTIAL, INCIDENTAL, SPECIAL, MULTIPLE, EXEMPLARY, AND PUNITIVE DAMAGES WHATSOEVER.**

Due to continuous research, evolving technology, updates and improvements, Zenner reserves the right to change product or system specifications without notice, except to the extent an outstanding contractual obligation exists.

ZENNER PERFORMANCE
15280 Addison Rd. Suite 100, Addison, Texas 75001 (888) 766-1253, Fax (972) 386-7711
www.zennerusa.com

Water Department

NB #2
CC 7/21/16

Memo

To: **Jim O'Toole, City Manager**

From: Jeff Lampi, W / WWTP Supt.

CC: Melissa Becotte, City Controller

Date: 7/12/16

Re: Leak Detection Survey

Simpson

RFP's have been sent and received for leak detection services. Three responses have been submitted. Because we have not had much experience with leak detection, we requested two different individuals to be our "third party review" of the RPF's and provide a recommendation of whom to hire. Both parties' recommended different vendors, one based off price alone (M.E. Simpson) & one based off knowledge of the company, performance, and proximity to us (Davies Water).

Bids received:

American Leak Detection, Paw Paw, MI;		$30,000.00
M.E. Simpson co, Inc; Valparaiso, IN;	**This Summer:**	**$14,000.00**
Davies Water (a division of) Ferguson, Appleton, WI		$26,000.00
	One Sweep next year:	**$13,000.00**

I would like to hire both vendors that have been recommended by the third party review, to each do one sweep of our entire system. I would like to have one vender work this summer, and the second next year before the end of June. This approach will help us create a better understanding of leak detection technology, and also provide two different methods to solve our current problem. (I've been told that finding this much water lose will be a long term goal, which may take a several sweeps and years to accomplish.)

Please consider this a request for approval to retain the services of M.E Simpson Co., Inc; of Valparaiso, IN not to exceed **$14,000.00** and also Davies Water, a division of Ferguson; of Appleton, WI not to exceed **$13,000.00**. Money has been budgeted for this activity in this current budget year.

LEAK DETECTION

CITY OF ESCANABA

2016-2017 Water Fund Budget Request Workpaper

Fund Number 333 Activity Number 000

REQUEST FOR CAPITAL EXPENDITURES

		Description of Request	Actual 2013-14	Actual 2014-15	Estimate 2015-16	Budget 2015-16	Request 2016-17	Recommended 2016-17	Final 2016-17	$ Change Col. 7-Col. 4	% Change Col. 7-Col. 4
		VFD on Influent Pumps				18,000	0	0	0	(18,000)	-100.00%
		Boiler System Replacement/Upgrade				50,000	0	0	0	(50,000)	-100.00%
		Breakroom Expansion / Bathroom Relocation				15,000	0	0	0	(15,000)	-100.00%
		Roof Ladders / Fall Protection				6,000	0	0	0	(6,000)	-100.00%
		Replace Cl2 Regulators & Ejectors				20,000	20,000	20,000	20,000	0	0.00%
541-136	-000	Structures and Improvements	0	3,450	22,000	109,000	20,000	20,000	20,000	(89,000)	-81.65%
		pH Meter				0	0	0	0	0	0.00%
541-140	-608	Laboratory Equipment	0	1,307	0	0	0	0	0	0	0.00%
		Pipe Boring Machine & Push Box (Share with Electric Dept)				30,000	0	0	0	(30,000)	-100.00%
		Small Hydrant Pipe				600	0	0	0	(600)	-100.00%
		Electric Pallet Jack				6,000	0	0	0	(6,000)	-100.00%
541-140	-612	Tools & Equipment	8,348	0	3,400	36,600	0	0	0	(36,600)	-100.00%
		Computer Upgrades				0	0	0	0	0	0.00%
541-146	-100	Office Equipment & Furniture	2,124	0	0	0	0	0	0	0	0.00%
		GIS Water System				0	33,000	30,000	30,000	30,000	NEW
		Replace Service Lines				10,000	10,000	10,000	10,000	0	0.00%
		Install Mixers in Water Towers				0	80,000	80,000	80,000	80,000	NEW
		Leak Detection				0	30,000	30,000	30,000	30,000	NEW
541-152	-00X	Transmission/Distribution Mains	1,200	0	8,000	10,000	153,000	150,000	150,000	140,000	1400.00%
		New Meters				40,000	80,000	130,000	130,000	90,000	225.00%
		Large Meter Replacement				20,000	20,000	20,000	20,000	0	0.00%
		City Wide Meter Replacement				0	450,000	0	0	0	0.00%
541-152	-005	Meters	52,580	61,650	60,000	60,000	550,000	150,000	150,000	90,000	150.00%
		TOTAL CAPITAL OUTLAY	64,252	66,407	93,400	215,600	723,000	320,000	320,000	104,400	48.42%

CITY OF ESCANABA
RECORD OF BIDS

DATE BIDS OPENED: 6/28/2016

DESCRIPTION OF ITEM: Escanaba Water Department Leak Detection

NAME OF BIDDER	ALL INCLUSIVE LEAK DETECTION SURVEY	ANY ADDITIONAL COST	TOTAL	CHECK OR BID BOND
M.E. Simpson Co. Inc.	14,000	Ø	14,000	Bond
Ferguson Waterworks	26,000	700	26,700	Bond
American Leak Detection	30,000	Ø	30,000	Check 3,000

PRESENT:

M.E. SIMPSON Co., Inc. (/)

Water Distribution System Leak Survey

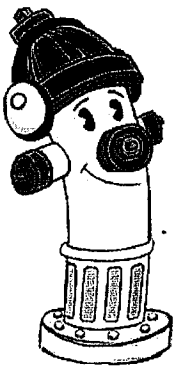

The Water Distribution Leak Survey program is conducted using state of the art leak computers:

- Fluid Conservation Systems'DigiCALL / AC Digital Leak Correlator.
- Vivax-Metrotech's HL6000X Correlator with an outstation preamplifier-transducer system.

Our experienced Project Team will use these devices, along with the FCS, S30, orL-MIC (electronically enhanced listening device), to survey the pipeline network.

Correlator's are microprocessor units that measure the time it takes the sound of the leak to travel from (A) the leak to (B) the point where the leak detection correlator is connected to the water line. By connecting the leak correlator out stations to the water line at two locations bracketing the suspected leak, the correlator analyzes the time delay difference between the sound waves received at each outstation, thus giving the distance from the leak to each connection point enabling us to determine the exact leak location.

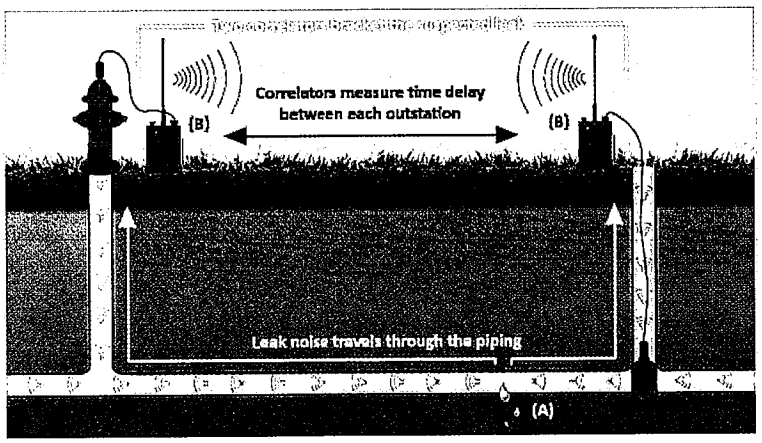

M.E. SIMPSON Co., Inc.

June 27, 2016

City of Escanaba
Attn: City Clerk
410 Ludington Street
Escanaba, MI 49829

Re: Escanaba Water Department Leak Detection – 2016

Dear City Clerk:

M.E. Simpson Co., Inc. is pleased to present the City of Escanaba, Michigan our proposal for the Utility's Water Distribution System Leak Detection Program. We are honored to be considered for this work and are confident our team will help make the project a success.

M.E. Simpson Co., Inc. is a Professional Services Firm dedicated to developing and providing programs and services designed to maximize peak performance for our clients' water distribution systems. Many of these programs are universally recognized as a part of "Best Management Practices" (BMPs) for utilities. We pride ourselves on delivering solid solutions using the highest quality technical and professional services by way of state-of-the-art technology and a skilled and well-trained staff of professionals. Our highly educated engineers and technical team are committed to the success of this project. They will be ready at a moment's notice to relieve your staff's burden and ensure a seamless continuation of your services.

Our services were developed and refined to provide utilities with programs that can be customized to meet their needs. From complete "Turn-Key" services to assisting with the development of "in-house" programs for utilities, M.E. Simpson Co., Inc. serves our clients with this ultimate goal: to deliver to the public the implicit faith that **"the water is always safe to drink"**.

Thank you for your consideration and this opportunity to acquaint you with our Leak Detection Services and offer this response. We are committed to exceeding your expectations.

Sincerely,

Michael D. Simpson
Chief Executive Officer

Michael D. Simpson
Chief Executive Officer

3410 Enterprise Avenue
Valparaiso, IN 46383

[illegible]
[illegible]

mike@mesimpson.com

Date June 27, 2016

Proposal of M.E. Simpson Co., Inc., (hereinafter called Bidder), a corporation, organized and existing under the laws of the State of Indiana, doing business as M.E. Simpson Co., Inc.. To the City Council, City Hall, P.O. Box 948 , City of Escanaba, Michigan, (hereinafter call Owner).

The Bidder, in compliance with the advertisement for bids and specifications for the **RFP: Escanaba Water Department Leak Detection – 2016**, having examined the plans and specifications with related documents and the site of the proposed work, and being familiar with all of the conditions surrounding the construction of the proposed project including the availability of materials and labor, hereby proposed to furnish all labor, materials, and supplies and to construct the project in accordance with the contract documents, within the time set forth therein, and at the price and/or prices stated below. These prices are to cover all expenses incurred in performing the work required under the contract documents, of which this proposal is part.

Exact dates of this project shall be coordinated with the City of Escanaba W-WW Superintendent prior to start of any construction.

The City of Escanaba reserves the right to delete part of or negotiate directly with any and all bidders concerning any matter related to any bid.

The Bidder acknowledges receipt of the following addendum:

_____ Dated: _____

_____ Dated: _____

_____ Dated: _____

PROPOSAL

RFP: Escanaba Water Department Leak Detection – 2016

Date: June 27, 2016

City of Escanaba, PO Box 948, Escanaba, MI 49829

We the undersigned, agree to furnish the City of Escanaba, Michigan **RFP: Escanaba Water Department Leak Detection – 2016,** in accordance with the attached minimum specifications, which are part of this proposal, at the following price:

Provide an all-inclusive Leak Detection survey of the entire Distribution System & City owned Service: $ 14,000.00

Any Additional cost not mentioned: $ 0.00

Please provide a detailed description of any additional costs: _____

FOB: City of Escanaba

CERTIFIED CHECK, CASHIER'S CHECK, OR BIDDER'S BOND ENCLOSED IN THE AMOUNT OF: $ see attached bid bond

(Must be included to qualify)

SUBMITTED BY:

FIRM: M.E. Simpson Co., Inc.

ADDRESS: 3406 Enterprise Ave.
Valparaiso, IN 46383

BY: _____

PRINTED NAME: Michael D. Simpson TITLE: CEO

(Business Address Seal- If bid is by a corporation)

RFP: Escanaba Water Department Leak Detection – 2016

BID BOND

KNOWN TO ALL MEN BY THESE PRESENTS, that we, the undersigned, _____ as principal and _____, as Surety, are hereby held and firmly bound unto the City of Escanaba, Delta County, Michigan, as Owner in the penal sum of _____ for the payment of

SCOPE OF WORK

Water Distribution System Leak Survey

The Field Scope of Service for the Leak Survey is understood to be the following:

M.E. Simpson Co., Inc. will furnish all labor, material, transportation, tools, and equipment necessary to survey the water distribution system areas selected by the C. M.E. Simpson Co., Inc. shall be required to provide such skilled and trained personnel and equipment necessary to complete the work herein specified. **There will be a minimum of Two Persons per team working on the survey at all times.**

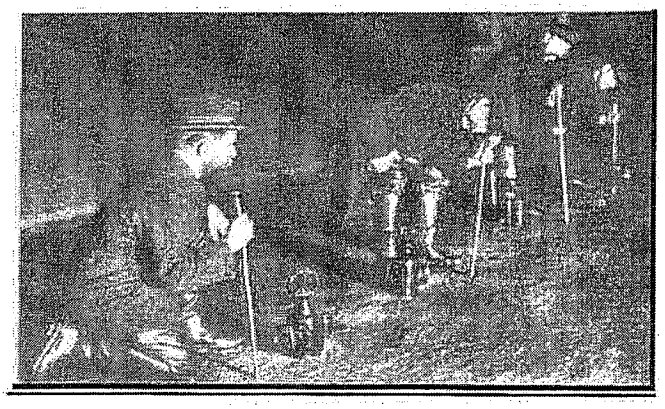

Leak Detection has come a long way since the early 1900's.

- Work in an orderly and safe manner to insure protection of the local residents, Utility employees, and the Field Staff so that no avoidable accidents occur.
- All Field Staff will have readily observable identification badges worn while in the field.
- The leak detection equipment to be used will be that which was described in the "Equipment to be used" section.
- Initially listen to **all fire hydrants, all main line valves**, and when necessary, selected service connections in the entire distribution system with the **FCS S30** electronic listening device or the **Gutermann AquaScope 3** electronic listening device by making physical contact with the valve, hydrant, pipe, or B-box. (Listening points that are not accessible will be given to the Utility and when corrected they will be listened to.) This will be done on the Utility's distribution system.
- Listening distances on metallic pipe, as well as AC or concrete type pipe, will not exceed 500' between points. For PVC/HDPE pipe, listening distances will not exceed 150' between points. I.E.: valves, hydrants auxiliary valves, hydrants, service valves or meter settings will be used with preference of listening points in order as follows; direct contact with the pipe, main line valves, hydrant auxiliary valves, hydrants, then service valves or meter settings.
- **All accessible points** along PVC water mains will be physically listened to including services, main line valves, and hydrants.

- Valve vaults full of water may be pumped out to facilitate listening. Sometimes full vaults can mask leak noise.
- Large diameter pipe (18"-36") may need to have additional listening performed by listening directly above the pipe at intervals of 6-10 feet.
- A "suspected leak" log shall be maintained indicating all areas where suspected leak noise was heard. This log will be reviewed when the Project Team is verifying the suspected leak area for confirmation of the actual existence of a leak. This log will be a part of the periodic reports turned into the Utility regardless of an actual leak located in the area or not, with an explanation of the noise source.
- When leak noise has been detected and or suspected, the Project Team will verify the suspected area a second time to confirm the noise. At least four hours will pass between the initial listening of the area before a second listen and confirmation is attempted.
- The Project Team will line locate the water main and service lines in the immediate area so the correct pipe distances can be input into the leak correlator and also so that the Water Utility will have an idea of where the water main is located prior to excavation. Non-metallic pipe locations will be "interpolated" as best that can be identified, given the line location of metallic services, Utility knowledge of the area, or other information regarding the actual location of the main.
- The Project Team will use the following Electronic Leak Correlators (either a FCS Accu-Corr, Digi-Corr, Tri-Corr Touch; Vivax Metrotech HL6000X; Echologics LeakFinderST w/hydrophones leak correlator), to determine if a leak is present and use the same equipment to pinpoint the leak.
- For PVC water mains only the Echologics LeakFinderST w/hydrophones leak correlator, will be used for correlations because of the ability for these correlators to be able to analyze the particular sound frequencies inherent to PVC pipe.
- The leak location will be marked in the field (on the surface) using environmentally formulated Precautionary Blue paint.
- The Project Team will document all leak locations with a diagram indicating the location of the leak. Other information related to that correlation will be included as part of the field sheet such as the filters used for the correlation, line locations, distances between sensors, etc.
- The field sheets will be copied, and turned into the assigned Water Department Manager daily or an agreed time period so the leak can be dug and repaired immediately. They will be classified as to the potential severity of water loss, as well as potential danger to the general public.
- The locations of leaks requiring immediate attention (immediate threat to life, injury or traffic) will be turned in as quickly as possible to facilitate the repair process.
- **"Ground miking" will not be used as the primary determination for leak locations.** Grounding miking will be done per Utility request, or when it has been deemed to be the most efficient means to listen to the water main running under ground. Large diameter mains (18" – 36") may need this additional evaluation. This method may be used to assist in confirmation of a leak location. However, "ground miking" is solely dependent on conditions beyond the direct observations of the leak technician such as soil conditions and composition, water table, depth of pipe bury, assumed location of the water main (such as concrete pressure pipe) and

compaction of pavement material causing leak sounds to scatter and echo or simply be absorbed.

- The Project Team will report daily or per request of the Utility, to the assigned Utility Manager and go over the progress of the previous day, as well as cover what will be surveyed the current day.
- It may be necessary to conduct parts of the Leak Survey during "off hours" such as at night. This may be required in areas of high traffic volume where traffic noise may affect the ability to detect leak noise, and traffic volume may affect the ability of the Project Team to be able to safely access main line valves in the middle of the street. The Project Team will give 24-hour advanced notice of intent to survey a particular area that may require after hours surveying or nighttime surveying. This is so the Utility can plan for the area to be surveyed, give notification to the Police department, as well as other Public Works Divisions as to the activity that will take place.
- A progression map shall be maintained for each section under survey indicating leak locations on the map. This will be especially helpful in quickly determining leak locations that correspond to the field leak diagrams turned into the Utility.
- As a part of the leak program, mapping discrepancies found on the current water atlas will be noted and included as a part of the final report so the Utility can make needed corrections. This will be included as a part of the periodic reporting to the Utility, thus enabling the Utility to keep up with mapping corrections.
- Distribution assets found to be in disrepair such as issues with hydrants, valves, and service lines, will be noted and turned into the Utility.
- Leaks verified on the customer's side of a service shut-off will not be located beyond the shut-off. If a leak appears to be on the Customers' side, the Utility will be notified first, then the customer notified and permission granted prior to the water being shut off even for short periods of time where possible and as time allows, as well as the ability for the customer to respond.
- If the Utility requests leak locations beyond the service shut off on the customer's side of the service line, this will result in an additional charge to the leak survey based on an hourly rate and this service must be agreed upon between the Utility and M.E. Simpson Co., Inc. prior to the start of the survey.
- Valves and hydrants will not be operated without Utility permission. Valves and hydrants that break during this type of operation are the sole responsibility of the Utility. M.E. Simpson Co., Inc. cannot be responsible for valves and hydrants that break due to pre-existing conditions.
- The Utility is encouraged to dig up and repair the leaks located as soon as possible so that the area may be re-surveyed while the Project Team is still working on the survey in that general geographical location to ensure no other leaks are present in that area.

Quality Control and Accuracy of Leak Locations

The level of accuracy of leak detection is a matter of taking in all the above considerations and applying those considerations to each individual potential leak location as it is being evaluated. Any statement made as to the level of accuracy of leak locations must be considered based on the individual conditions of each leak.

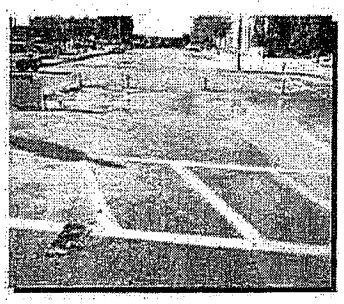

Leak surfacing at intersection

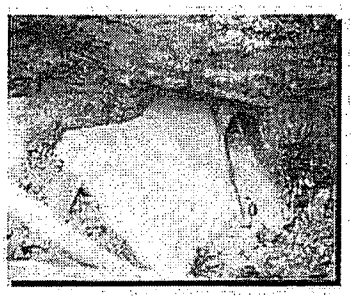

Hidden leak running into drain tile

Locating leaks on a distribution system can be very challenging. It is not a perfect science. Pipes and fittings can leak for a variety of reasons (age, poor installation, material failures, bad soils, etc.), and the ability to locate leaks is dependent on the stated variables listed in the "Project Approach". By employing a strict methodology in the field for conducting a leak survey, these variables can be accounted for and mitigated. The depth of experience of the Project Team is extremely important to maintaining the ability to have accurate locations of leaks. Additionally, crews work as Two-Person Teams in the field, double checking the progress of the work as the survey progresses. The systematic procedure for leak confirmation has been stated in the Scope of Field Service and is restated here.

"Suspected leak areas are always listened to a second time, preferably at a different time of day than originally listened to. The mains and services will be line located to insure correct pipe distances are used for the correlations. Correlations may need to be performed several times with several configurations to insure all the possible scenarios have been covered. Sewer manholes may need to be opened and flows observed. If there is any doubt as to the existence of a leak, the area may be checked and correlated at different times to rule out water usage or other factors. The progress of the survey will be monitored by the use of daily logs and a progression map with suspected leak noise indications marked and possible leak locations will be maintained. Field leak location forms will be turned into the Utility according to the agreed schedule. The Project Team will follow up on leak locations by monitoring the repair schedule of the Utility. That way in case a potential leak location is wrong, the Project Team can return to the site and determine why the leak location was incorrect, and correct it. This means maintaining a good level of communication between the Project Team in the field, and the Utility. As a matter of Quality Control for leaks in the field, the Echologics LeakFinderST has the distinct ability to be able to detect and pinpoint more than one leak in the same relative area, thus allowing better leak coverage and insuring that one leak is not "masking" another leak in the same area. The use of progress reports and meetings will allow for open discussions of problems encountered so solutions can be examined."

Utility Observations

The M.E. Simpson Co., Inc. Project Team will welcome having staff of the Utility observe field procedures while the Leak Survey is in progress. They will be happy to explain and demonstrate the equipment and techniques that are employed by M.E. Simpson Co., Inc. for detecting and locating leaks on the Water System. This may be useful for the staff of the Utility in understanding the parameters of Leak Detection, especially during an emergency such as a main break on a critical line where a major disruption of service could occur.

Final Reports, Documentations & Communications

M.E. Simpson Co, Inc. will perform the following:

- Project Team will **meet daily** with assigned Utility personnel to go over areas of survey for prior workday and plan current day and area to survey.
- The field technicians will be readily available by cellular phone This will facilitate communications between the Utility and the field technicians. A **24-hour toll-free 800 number** is available for direct contact with M.E. Simpson Co., Inc. for emergencies.

Effective communication...
accurate documentation...
Insuring the success for the leak survey

- **Diagram all leak locations**, date of location, and classify according to severity and an estimate of loss. These will be turned in daily to appointed Utility Personnel.
- **The Project Manager will** meet with the Utility regularly for a progress report.
- **Prepare a progress report** at monthly intervals for the Utility if requested.
- **Maintain a progression map to be included with the progress reports and final report** of the project indicating leak locations with symbols indicating type and severity corresponding to the individual leak diagrams.
- Develop a **Leak Survey log** of activity which will also have confirmed leaks listed and this list will be turned in weekly (in an Excel format). The list will also be included with the final report that will include the following;
  1. Mechanical deficiencies discovered
  2. Mapping errors on the water atlas
  3. Type of monitored appurtenances
  4. Location of same for leaks discovered
  5. Total estimated loss
- **Prepare the final report** at the completion of the project which will include all leak location reports with drawings, total of estimated water loss, total pipe distance investigated, a description of the area surveyed, and other problems found in the system during the course of the survey that need the attention of the Water Utility.

The leak summary will list leak types such as main leaks, service line leaks, valve leaks, or hydrant leaks. A cost benefit analysis of the survey based on the "cost to produce" water will also be included that describes the financial impact to the Utility for water loss. Recommendations for system maintenance will be a part of this report based on field observations made during the survey. **This final report shall be made available for submission to the Utility within thirty (30) working days of the completion of the fieldwork.**

Assumptions & Services Provided by the Utility

- The Utility will furnish all maps, atlases, and records necessary to properly conduct the survey. All corrected maps are to be returned to the Utility at the completion of the project.
- The Utility will assist as necessary to clean out service valves, meter pits and valve-boxes needed for listening.
- The Utility will provide a Primary Contact Person and/or secondary contact person for the Field Staff to report to on a periodic basis. This person shall act as the official liaison for the duration of the Leak Survey. This person shall have a working knowledge of the water system and will be helpful in attempting to locate particularly hard-to-find water valves for listening and for general information about the water system. *This person will not need to assist the Project Team on a full time basis*, but only on an "as needed" basis.
- The Utility will assist, if needed, to help gain entry into sites that may be difficult to get into due to security issues or other concerns.
- The Utility will assist, if needed, to locate all nonmetallic pipe within the service area. This would include all Concrete Cylinder pipe and Asbestos Cement Pipe.
- We will encourage the immediate digging of major leaks (main breaks) so that if there are problems with the leak location, the problems can be corrected while the Project Team is close by and can verify the site.

Leak Located

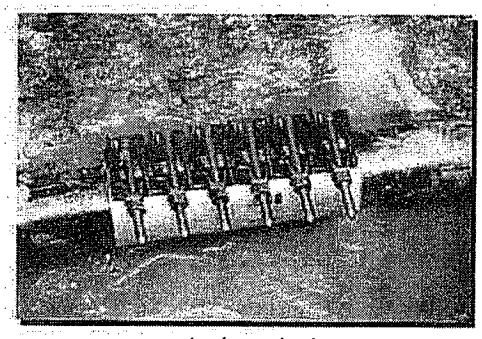

Leak repaired.

The leak survey work includes monitoring all accessible main line valves, all hydrants, and all services as needed to keep listening distances within the accepted bounds and Scope of the survey.

PROJECT APPROACH & PROJECT MANAGEMENT

M.E. Simpson Co., Inc.'s project management approach is what leads to our proven track record to complete projects on time and within the budget established. Based on our past experience, we have developed a project approach that will insure the Utility of effective communication throughout this project.

Our project management system establishes - the single project manager – who has the responsibility and authority to act on behalf of M.E. Simpson Co., Inc. This project manager will stay with the project from beginning to the successful completion. The project manager's specific responsibilities include:

- Coordination of all activities in this project
- Establishing key decisions and review milestones during this project
- Preparing an initial project development plan identifying the schedule of work tasks and key personnel to perform the work in the field to meet the milestones and objectives
- Coordinate communications and meetings with the Utility as needed or required to review technical concepts and alternatives, soliciting staff input and coordinating activities with the project team
- Prepare periodic reports as needed and meet with the Utility on a regular basis summarizing project scheduling, progress and maintaining the project within the budget stipulated
- Oversee the execution and development of the project deliverables

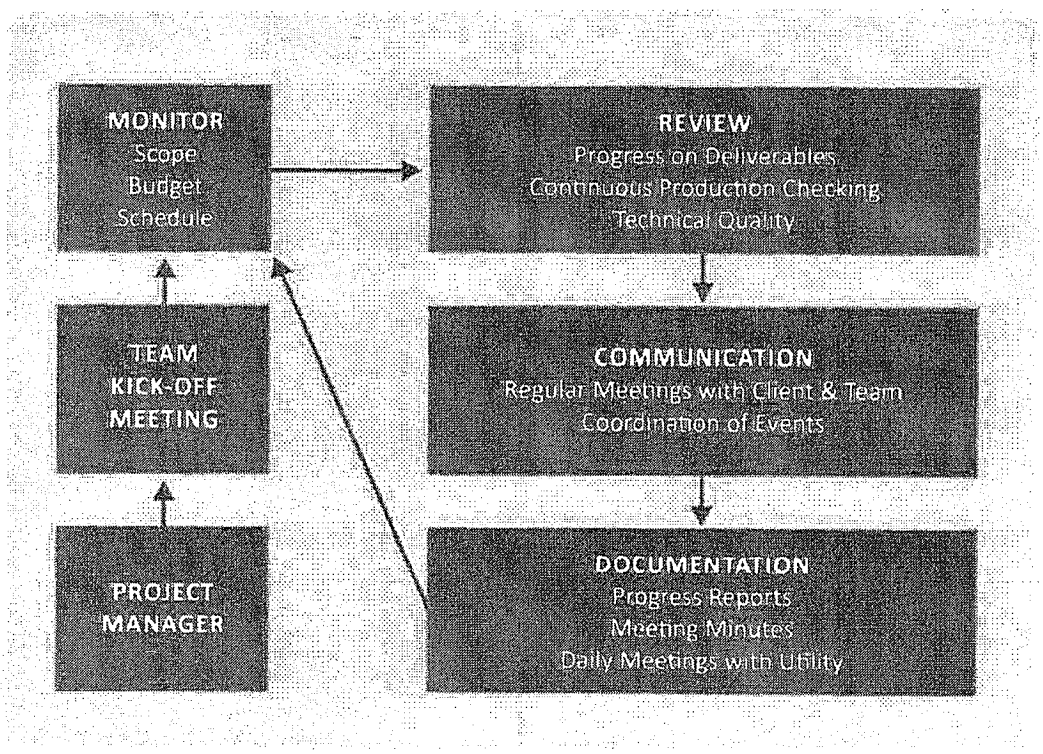

Project management remains an important activity during the course of the project and does not stop with the project manager. Each project team deployed into the field is dedicated to providing the best leak survey coverage that can be attained using the state of the art leak detection equipment, tools, field experience and knowledge. Each field team will be made up of two experienced leak detection technicians that also have been crossed trained in other disciplines of water loss control such as water meter assessments (residential, commercial, wholesale, and production meters), and water distribution system field maintenance such as distribution flow testing, valve exercising and locational assessments, and Unidirectional water main flushing. It is this combination of experience and knowledge that has helped shape our approach to water loss assessments in distribution systems because the technicians have the capacity to make on the spot decisions regarding any fine tuning of the leak detection program while in the field. They will maintain constant communication with the Utility and the project manager regarding their daily progress as well as any major issues needing immediate attention and discussion.

M.E. Simpson Co., Inc. believes that the selection of our team to perform this survey will provide the Utility with exceptional experience, sound decision making, and a level of service providing the following advantages:

- A professional leak detection team with a specialized expertise in water loss management
- An experienced team with the capacity to provide the highest quality work for the Utility
- A project approach that incorporates interim reporting and continuous input opportunities
- Innovative proven analysis techniques developed from the completion of several hundred similar projects that sought the same scope and results as this project

Project Quality Assurance/Quality Control

Quality is of the utmost importance to M.E. Simpson Co., Inc. – not merely because of the Utility's and other client's requirements, but because it is vital to our continued success and viability. Quality management and services bring to all of us the rewards of jobs well done, satisfied Utility staff, and successful projects.

M.E. Simpson Co., Inc.'s QA/QC program is built around several key elements of M.E. Simpson Co., Inc.'s mission and values which consist of:

- Maintaining a reputation for quality performance
- Client satisfaction
- Continuous process improvement
- Open communication with the field staff and the Utility
- Team Work

The QA/QC plan for this project is very simple. No work will leave M.E. Simpson Co., Inc. until it has been verified that all the requirements and objectives of the project as well as the requirements of the project QA/QC managers have been met. During the course of the project, the project manager and/or the QA/QC manager will meet with the Utility to ensure that the work product is technically correct, but also meets the needs and expectations of the Utility.

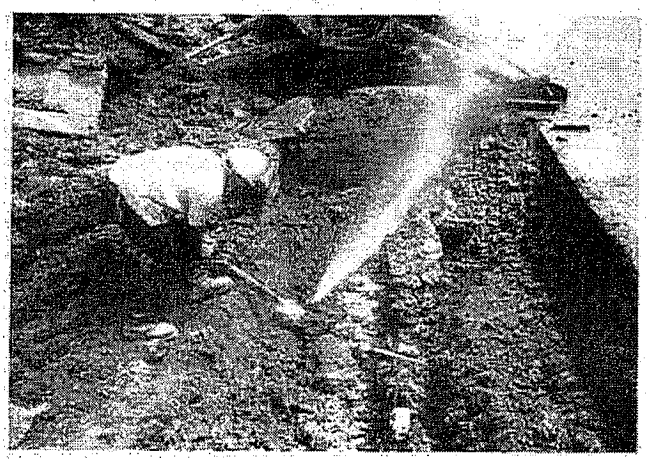

M.E. Simpson Co., Inc.'s professional services are grounded in sound principles that meet the tests of time from past successes of hundreds of water loss projects and will satisfy the quality requirements of the Scope of Service. Each member of the project team will have a thorough understanding of the project objectives. They will apply sound methodology and principles, and are expected to produce quality, accurate and complete documents. The QA/QC procedure has been developed and implemented based on tried and proven methodologies. The prevention of poor quality service is based on four sound principles:

- Quality management of the project by using experienced personnel committed to excellence.
- Conformance to requirements by being knowledgeable of all local conditions in the field and keeping abreast of new cutting edge leak detection methods.
- Prevention of rework and errors by using teamwork in the field, cross checking the procedure every step of the way, and having data entry staff knowledgeable in all aspects of leak detection projects.
- Quality is <u>built in - not added on</u>. The project management and field staff have shown that a quality service is produced when the project tasks are properly sequenced and carried out to the final termination of the program using the built in system of checks and balances.

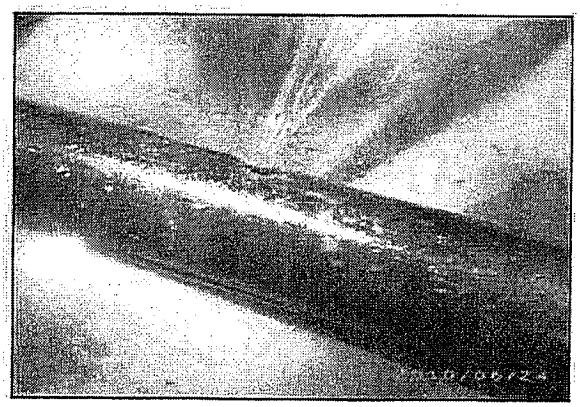

The above images were taken of a main break discovered by M.E. Simpson Co., Inc. in Princeton, Indiana in June of 2010. This leak, along with 64 others, was costing the utility upwards of $128,246.40 a year.

FIRM EXPERIENCE

Working together with our clients to create secure water distribution systems is what drives our practice.

Company Overview

For 37 years, M.E. Simpson Co., Inc. has helped utilities across the U.S. locate and resolve water loss control issues so customers could confidently provide safe, quality water to the community. We use state-of-the-art programs to assist utilities with their meters or water distribution systems condition and performance shortfalls. Simpson's trained professionals work hand-in-hand with utility team members to set up monitoring systems that help them avert future problems.

Primary line of business:	Water loss control programs
How long has the company been in business:	For 37 years; since 1979
How long has the company been providing leakage assessment services with regard to this proposal:	For almost 30 years, M.E. Simpson Co., Inc. has used a state-of-the-art computer-leak-correlator-based system to locate and pinpoint leaks in water distribution systems.

M.E. Simpson Co., Inc.

For our clients, we deliver a team of water system experts who not only help bring their existing water systems to peak performance, but also help them build operation and maintenance programs uniquely tailored to their communities' needs. Water solutions that withstand the tests of both growth and time.

Water system specialists ... by the numbers

Water Loss Control Programs

+60,000 Large water meters serviced

100,000 Miles of pipe leak detection serviced

Asset Management Services

+500,000 Valves located + exercised

Fire Hydrant Flow Testing Program
(Water main capacity)

75,000 Fire hydrants flowed, maintained + water main capacity information developed

These numbers don't show the whole story. Behind them are M.E. Simpson Co., Inc.'s ongoing efforts to educate and grow its company to become proud partners, Sanitarians who can proactively deal with their municipality's unique water distribution systems and confidently deliver safe water 24/7/365 and every day.

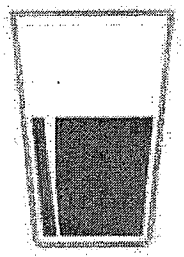

Leading, Innovating, Educating
Our Commitment to the Industry

M.E. Simpson Co., Inc.'s team works with clients, community members and people to educate them through public presentations, training seminars, and providing continuing education credits for water operators through various water groups. Our ongoing programs are the "goals" seminars at local, state and national AWWA seminars and conferences.

- Large Water Meter Evaluation
- Testing + Repair
- Water Distribution System Leak Surveys
- Water Distribution System Valve Location
- Exercising + Computerized Documentation
- Fire Hydrant Maintenance
- Water Main Capacity Training
- Unidirectional Flushing
- Asset Management Practices
  (Work Order Management Software)

M.E. Simpson Co., Inc. was formed on the simple fact that water distribution systems cannot fail because they are critical to every community. When things are right, no one knows these systems exists. But when they are wrong, lives and livelihoods are disrupted. Our goal? To make sure yours is right. Always.

Providing solutions to maximize your water distribution + collection systems

Stop water losses
Avert future problems
Maximize utility revenue
Lower distribution system losses
Secure your utility for years

Client References

M.E. Simpson Co., Inc. has been in business since 1979. The company continues to perform services for numerous cities across Arizona, California, Georgia, Illinois, Indiana, Maryland, Michigan, Minnesota, Ohio, Texas, Wisconsin and other regions of the United States. We began offering 24-hour On-Call Emergency Leak Detection services in the Chicago Metropolitan Area in 1989. We added these same services to the Central Indiana/Indianapolis Area in 1999.

In 2013 we provided over 560 emergency call outs in the Chicago Land Area. That year approximately 70 different utilities, used our on-call services. Most of the folks, Chicago Land Area, listed as references in the other sections of this response use our On-Call Emergency services.

In 2014 we provided over 1000 emergency call outs in the Chicago Land Area, 420 of them in an eight-week period between January 1, 2014 and March 1, 2014. That year approximately 105 different utilities, used our on-call services. Most of the folks, Chicago Land Area, listed as references in the other sections of this response use our On Call Emergency services.

In 2015 we provided over 712 emergency call outs in the Chicago Land Area. That year approximately 85 different utilities, used our on-call services. Most of the folks, Chicago Land Area, listed as references in the other sections of this response use our On Call Emergency services.

Village of Algonquin, IL (2004-2014)

M.E. Simpson, Co., Inc. conducted a Leak Survey on approximately 160 miles as a way for the Village to reduce water losses occurring in the distribution system. The most recent completed Leak Survey Program in 2014 in the location of 32 leaks totaling 82,080 gallons of water per day. Using a price to produce of $3.27 per thousand gallons, these leaks were estimated to be costing the Utility in excess of $268 per day, or $97,966 annually. **This Leak Survey paid for itself within three months.**

Contracted amount:	$25,600.00
Time required to complete the project:	4 weeks
Findings of the project:	32 leaks/82,080 GPD
Projected annualized cost saving to the Utility authorizing the project:	$97,966.00
Contact:	**Mr. Gary Hallaert** **Utilities Superintendent** Village of Algonquin 110 Meyer Drive Algonquin, IL 60102 847.658.2754 garyhallaert@algonquin.org

Village of Carpentersville, IL (2011, 2014)

M.E. Simpson, Co., Inc. conducted a Leak Survey on approximately 129 miles as a way for the Village to reduce water losses occurring in the distribution system. The most recent completed Leak Survey Program in 2014 in the location of 118 leaks totaling 282,240 gallons of water per day. Using a selling price of $5.24 per thousand gallons, these leaks were estimated to be costing the Utility in excess of $1,479 per day or $539,812 annually. **This Leak Survey paid for itself within two months.**

Contracted amount:	$12,000.00
Time required to complete the project:	3 weeks
Findings of the project:	118 leaks/282,240 GPD
Projected annualized cost saving to the Utility authorizing the project:	$539,812.00
Contact:	**Mr. Bob Cole** **Director of Public Works** 1200 L.W. Besinger Drive Carpentersville, IL 60110 847.344.1973 bcole@vil.carpentersville.il.us

Grafton Water and Utility, WI (2011-2014)

M.E. Simpson, Co., Inc. conducted a Leak Survey on approximately 30 miles as a way for the Utility to reduce water losses occurring in the distribution system. The most recent completed Leak Survey Program in 2014 in the location of 6 leaks totaling 18,720 gallons of water per day. Using a selling price of $2.16 per thousand gallons, these leaks were estimated to be costing the Utility in excess of $49 per day or $17,834 annually. **This Leak Survey paid for itself within two months.**

Contracted amount:	$4,800.00
Time required to complete the project:	
Findings of the project:	6 leaks/18,720 GPD over 30 miles of main
Projected annualized cost saving to the Utility authorizing the project:	$17,834.00
Contact:	**Mr. Tim Nennig** **Utilities Superintendent** Village of Grafton 1900 9th Avenue, PO Box 144 Grafton, WI 262.375.5330 tnennig@village.grafton.wi.us

Department of Water Management (DWM), Chicago, Illinois (2012-2017)
M.E. Simpson Co., Inc. is currently performing large meter evaluations and testing for 2000 commercial/industrial accounts and 200 wholesale metering locations for the City of Chicago's Department of Water Management (DWM). M.E. Simpson Co., Inc. is providing the field services expertise, field supervision, testing equipment, vehicles and the field personnel for this comprehensive meter evaluation and accuracy testing project. This project was developed to assist the DWM in controlling the apparent water losses in the large commercial, industrial meters and wholesale metered accounts. Over 2000 – 3" and larger meters are being inventoried, classified, and tested for accuracy. All meter locations are having digital photos taken of each meter setting along with drawings depicting piping configurations that might have an effect on meter accuracy. A large meter database is being custom created to be used with the DWM's GIS system. The field work was started in January 2013. After the field work is completed, a complete evaluation of all the meters inspected and tested will be performed and subjected to statistical analysis for creating a complete on-going meter evaluation and maintenance program for use by DWM field staff. The large meter population will be set up so regular meter testing intervals can be based on meter revenue as well as meter size and type. This program is part of the larger effort to properly meter all water consumed in the City.

Contracted amount:	$1,110,350.00
Time required to complete the project:	2012-2017 (in progress)
Findings of the project:	Inaccurate commercial/wholesale meters
Projected annualized cost saving to the Utility authorizing the project:	Revenue recovery of estimated $4.1 mil from wholesale meters
Contact:	**Ms. Andrea Putz, PhD** **Director of Water Research and Development** Department of Water Management Jardine Water Treatment Plant 1000 East Ohio St. Chicago, IL 60611 312.742.1070

Additional client references include:

Mr. Jim Cates
Water Superintendent
Village of Westmont
39 E. Burlington
Village of Westmont, IL 60559-1790
630.829.4479

Mr. John Ingram
Director of Public Works
Village of Orland Park
15655 S. Ravinia Ave.
Orland Park, IL 60462
708.403.6350

Mr. Dave Moody
Water Manager
Village of Downers Grove
5101 Walnut Avenue
Downers Grove, IL 60515-4074
630.434.5462

Mr. Mark Brow
Water Supervisor
Village of New Lenox
2401 Ellis Road
New Lenox, IL 60451-1580
815.215.4800

FIRM REGISTRATION

M.E. Simpson Co., Inc. is registered to conduct business in the State of Michigan. They have been performing work in Michigan since 1995.

SUBLETTING OF CONTRACT

M.E. Simpson Co., Inc. will not be utilizing any subcontractors for this work.

EXPERIENCE OF KEY PERSONNEL

Our team brings the necessary experience for a project of this magnitude, as well as the personal attributes needed to serve the City of Escanaba, Michigan with distinction.

We offer our clients the highest quality technical and professional services, using state-of-the-art technologies and highly skilled and trained professionals. The M.E. Simpson Co., Inc. team members selected to serve the City of Escanaba bring significant experience and a proven track record of delivering timely, cost-effective and sound water distribution and wastewater collection solutions. They share a passionate commitment to client service and attention to detail required for a successful project.

Project Manager

Michael D. Simpson

Michael Simpson began his career in the water industry with the company as a field technician testing and repairing large water meters. A few short years later the company began performing leak detection for water utilities. Michael learned the leak detection craft, then designed and implemented the company's leak detection program. By combining the large meter testing with leak detection experiences, Michael melded together the company's Water Loss Control program and Water Distribution System Evaluation Programs. Today, he oversees the company as a whole, focusing on financial management and business development.

Michael joined AWWA in 1983 and is heavily involved in the Indiana Section AWWA, as well as the Illinois Section AWWA and the AZ Water Association. He has taught classes on water loss control, large meter testing, leak detection and water distribution system evaluations throughout the United States. Michael is a member of AWWA's Water Loss Control Committee, and has served as an officer of both the Association and the Indiana Section AWWA. Michael has been awarded Water For People's Kenneth J. Miller Founders Award for volunteerism and AWWA's prestigious George Warren Fuller Award.

Professional Certifications:

- 30-Hour OSHA Certified for General Industry
- American Red Cross First Aid and CPR with AED Certified
- American Traffic Safety Services Association Flagging Certified
- Extensive traffic control training
- Extensive confined space training

Assistant Project Manager

Jerry D. Reiling

Jerry Reiling has been with the Company since May 1996. He is a graduate of Purdue University with a B.A. in Physical Education. Jerry previously worked in both the environmental services industries and HVAC for 10 years. He is responsible for day to day operations of field crews for the M.E. Simpson Co., Inc. Dyer, Indiana office. Jerry has over 19 years of experience directing and conducting water loss reduction programs in the field, specifically leak detection and leak locating, along with meter testing. He has completed classes and attended lectures on the operation and maintenance of water meters. Jerry is very experienced in the following: the operation and maintenance of water meters; main line water valve location, exercising and mapping with GPS; hydrant flow testing and hydrant maintenance, Unidirectional Water Main Flushing, use of state of the art leak detection equipment, and the operation of our Polcon® Flow Testing equipment used for hydraulic studies.

Professional Certifications:

- 10-Hour OSHA Certified for General Industry
- American Red Cross First Aid and CPR with AED Certified
- American Traffic Safety Services Association Flagging Certified
- Extensive traffic control training
- Extensive confined space training

Project Leaders

Sandison Petrettta

Water Distribution System Leak Survey

Water Distribution System Emergency Leak Detection Call Outs

Sandison Petretta has been with M.E. Simpson Co., Inc. since July of 2000. He previously worked in the commercial painting industry. Sandison has attended numerous classes and lectures related to the operation, maintenance, and installation of water meters, and completed classes in plumbing. Sandison has experience in the following; maintenance and installation of water meters; valve location, exercising and mapping; fire hydrant and main capacity flow testing; and the use of state of the art leak detection equipment. He is also experienced in the use of all of our Polcon® Flow Testing equipment.

Professional Certifications:

- 10-Hour OSHA Certified for General Industry
- American Red Cross First Aid and CPR with AED Certified
- American Traffic Safety Services Association Flagging Certified
- Extensive traffic control training
- Extensive confined space training

Adam Zagorac

Water Distribution System Leak Survey

Water Distribution System Emergency Leak Detection Call Outs

Adam Zagorac has been with M.E. Simpson Co., Inc. since December of 2007. He has attended numerous classes and lectures related to the operation, maintenance and installation of water meters, and also completed classes in plumbing. Adam has experience in the following: maintenance and installation of water meters; valve location, exercising and mapping; fire hydrant and main capacity flow testing; and the use of state of the art leak detection equipment. He is also experienced in the use of all of our Polcon® Flow Testing equipment.

Professional Certifications:

- 10-Hour OSHA Certified for General Industry
- American Red Cross First Aid and CPR with AED Certified
- American Traffic Safety Services Association Flagging Certified
- Extensive traffic control training
- Extensive confined space training

QA/QC

Aaron M. Horbovetz, PE, PMP

Aaron Horbovetz has been with the Company since September of 1999. He earned his degree in Mechanical Engineering from Purdue University, completed his EIT work and recently passed the PE exam for the state of Indiana. Aaron is a regular presenter at AWWA conferences since 2012, both at section meetings and at the ACE conferences. He has attended numerous classes and lectures related to the operation, maintenance and installation of water meters, and completed classes in plumbing. Aaron has experience in the following: maintenance and installation of water meters; valve location, exercising and mapping, fire hydrant and main capacity flow testing, and the use of state of the art leak detection equipment; and is also very experienced in the use of all of our Polcon® Flow Testing equipment.

Professional Certifications:

- Licensed Professional Engineer, Indiana
- Certified Project Management Professional (PMP)
  - Member of Project Management's Institute Calumet Chapter
- 10 Hour OSHA Certified for General Industry
- American Red Cross First Aid and CPR with AED Certified
- American Traffic Safety Services Association Flagging Certified
- Extensive traffic control training
- Extensive confined space training

Alexander S. Hood, MBA

Alex Hood has been with M.E. Simpson Co., Inc. in various capacities since October 1998. He has attended numerous classes and lectures on the operation and maintenance of water meters. Alex has experience in the maintenance and installation of water meters; in valve location, exercising and mapping; and in the use of state of the art leak detection equipment. He is experienced in water meter, fire hydrant and water main capacity flow testing, and the operation of our Polcon® Flow Testing equipment.

Professional Certifications:

- Authorized OSHA 10/30-hour General Industry Trainer
- American Red Cross First Aid and CPR with AED Instructor

- American Traffic Safety Services Association Flagging Instructor
- American Traffic Safety Services Association Traffic Control Technician Instructor
- American Traffic Safety Services Association Traffic Control Supervisor Instructor
- American Traffic Safety Services Association Certified Traffic Control Supervisor
- American Traffic Safety Services Association Certified Traffic Control Technician
- OSHA 30-Hour Card in Construction Industry
- OSHA 30-Hour Card in General Industry

PROJECT SAFETY PLAN

M.E. Simpson Co., Inc.'s Safety Programs cover all aspects of the work performed by M.E. Simpson Co., Inc. We take great pride in our safety plan/policy/program and that is evident in our EMR scores over the last five years. The safety of our employees, the utilities employees and that of the general public is our #1 priority.

Our Safety Plan/Policy/Program, with all of its parts, is 60 pages in length. In an effort to be more efficient and less wasteful we do not print copies of the safety program for RFPs. There is nothing secretive or proprietary contained within our plan/policy/program and we are happy to share its contents. If you would like a PDF copy of our plan/policy/program please contact Alex Hood, Operations Manager, at 800.255.1521 and a copy of our program will be sent via email to you.

Below is an overview of our plan/policy/program:

Safety is a major part of any project. M.E. Simpson Co., Inc. always provides a safe work environment for its employees. **Our staff is trained in General Industry OSHA rules, Confined Space Entry & Self-Rescue, First Responder First Aid, CPR, and Traffic Control.** While in the field on your project, M.E. Simpson Co., Inc. and its employees will follow all of the necessary safety procedures to protect themselves, your staff and the general public.

M.E. Simpson Co., Inc. uses Two-Man Teams for Safety and Quality Assurance.

The use of a "one-person" leak detection team is dangerous and impractical where water mains run under roadways. It would be a dangerous precedent to allow a "one-person" team to access main line valves located in the roadway, attempt to listen to the valve with headphones on, and at the same time try to control traffic flow at that person's location in the street.

Therefore M.E. Simpson Co., Inc. adheres to the following:

- The Project Manager and the Field Manager will be trained in accordance with OSHA Standard 1910 (General Industry) and be in possession of an OSHA 10 Hour or 30 Hour Card.
- Any listening points located in a **"confined space"** such as pit and vault installations that **require entry** will be treated in accordance with the safety rules regarding **Confined Space Entry, designated by the Utility, The Department of Labor and OSHA.**

- All personnel are **trained and certified** in Confined Space Entry & Self-Rescue.

- We will follow all safety rules regarding **First Responder First Aid & CPR, designated by the Utility, The Department of Labor and OSHA.**
  - All personnel are **trained and certified** in First Responder First Aid & CPR.
- We will follow all **traffic safety rules, designated by the Utility, The Department of Labor, OSHA, and the Illinois Department of Transportation (per MUTCD).**
  - All personnel are **trained and certified**, by the **AMERICAN TRAFFIC SAFTEY SERVICES ASSOCIATION (ATSSA)** in Traffic Control and Safety.

ATSSA Certified Traffic Control Personnel

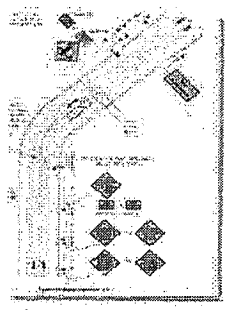

Work Zone Safety Plans will be used

Current documentations of safety training and certifications can be provided for all project personnel for the Utility. These certifications are current and up to date (for 2015) for all project personnel.

INVESTMENT

A commitment to improving and maximizing the City of Escanaba's water distribution system for future generations.

M.E. Simpson Co., Inc. is pleased to offer our fee proposal for the Escanaba's Water Distribution System Leak Detection Program.

M.E. Simpson Co., Inc. will perform Leak Detection Program on 80 miles of the water distribution system. The services will be completed by one of our two-man teams with all necessary equipment furnished by M.E. Simpson Co., Inc. as described within this document.

2016 Water Distribution System Leak Detection Program fee:

Fourteen Thousand Dollars ---------- $14,000.00**

**Any additional miles of pipe surveyed beyond the original 80 miles, will be assessed at a rate of $175.00 per mile of pipe.

All procedures will be followed according to the above project scope of services. The data gathered will be compiled and a report of all leaks found will be submitted to your Utility as the survey takes place as well as a comprehensive final report of the leak survey.

We thank you for this opportunity to acquaint you with our Water Distribution System Leak Survey services. Please call us if you wish to discuss our services in more detail.

Sample Water Loss Reports

As requested, we have included samples of three reports on the following pages:

City of Joliet
Village of Downers Grove
City of Atlanta

M.E. SIMPSON Co., Inc.

February 21, 2014

Mr. James E. Eggen, P.E.
Director of Public Utilities
City of Joliet
921 East Washington Street
Joliet, Illinois 60433

Dear Mr. Eggen,

M.E. Simpson Co., Inc. is a technical service company providing Leak Survey Programs, Large Meter Testing and Repair Programs, Water Main Location, Valve Assessment, and Computer Mapping Programs. These "Technical Services" offered by M.E. Simpson Co., Inc. are designed to aid a utility in reducing unaccounted for water and lost revenue.

M.E. Simpson Co., Inc. is pleased to submit this report of our leak detection survey for the City of Joliet. This survey addressed the Joliet water distribution system, consisting of approximately 20 miles of water main. The report contains the results of our investigation including the following:

1. A DESCRIPTION OF THE AREA SURVEYED.
2. METHODOLOGY OF THE SURVEY
3. A LIST OF LEAKS AND TYPE OF LEAKS LOCATED
4. GENERAL RECOMMENDATIONS BASED ON OUR INVESTIGATION

DESCRIPTION OF THE AREA SURVEYED

Approximately 105,600 lineal feet were surveyed as part of the system investigation. This included all fire hydrants, accessible mainline valves and selected services.

METHODOLOGY

Your survey was conducted using the latest state of the art leak computers, the **FLUID CONSERVATION SYSTEMS' FCS Accu-Corr / Digi-Corr or Vivax Metrotech HL6000 leak correlator.** The **FCS S-30** is a tool used as an electronically enhanced listening device. All of these correlators are manufactured by Fluid Conservation Systems of Milford, Ohio. These electronic instruments are microprocessor units that measure the time it takes the sound of the leak to travel from the leak to the point where the leak Correlator is connected to the water line. By connecting the leak correlator to the water line at two locations, it will compute the distance from the leak to each connection point thus enabling us to determine the exact leak location. Our experienced technicians used these devices, along with the S30 electronically enhanced listening device or the L-Mic electronic listening device, as listening equipment to survey your pipeline network. Each hydrant and accessible valve was used as listening points to identify leaks. Selected services, b-boxes, were used on an as needed basis to keep the listening distances under five hundred feet (500'). "Pinpointing" of the leak, as well as locating leaks that other methods fail to reveal was also done with this equipment.

3406 Enterprise Ave., Valparaiso, IN 46383 | Ph: (800) 255-1521 | Fax: (888) 531-2444 | www.mesimpson.com | salesinfo@mesimpson.com

LEAKAGE LOCATED

All water mains within the Project area were surveyed and 9 leaks were located. These leaks have been grouped as follows: Main Line Leak - 1, Service Line Leak - 3, Fire Service Leak -0, Valve Leak - 1, Hydrant Leak - 4, Other Type Leak - 0. All of these leaks have been verbally reported to your office with these locations, so many have probably been repaired already. Following are the leak locations with an estimated GPD (Gallons Per Day) leakage potential.

Type	Location	SIZE
Main Line	Scott Street & Webster Street	
	see enclosed diagram	28,800 GPD
Service Line	331 Joliet Street	
	see enclosed diagram	7,200 GPD
Service Line	457 Des Plaines Street	
	see enclosed diagram	5,760 GPD
Service Line	6 & 8 Wallace Street	
	see enclosed diagram	4,320 GPD
Valve (packing)	Des Plaines Street & Washington Street	
	see enclosed diagram	2,880 GPD
Hydrant	Ottawa Street & Clinton Street	
	see enclosed diagram	2,880 GPD
Hydrant	150 West Jefferson Street	
	see enclosed diagram	1,440 GPD
Hydrant	95 Chicago Street (S)	
	see enclosed diagram	1,440 GPD
Hydrant	Chicago Street & New Street	
	see enclosed diagram **Fixed**	1,440 GPD
9 Leaks Located	**ESTIMATED LEAKAGE TOTAL**	**56,160 GPD**

LEAK QUANTITIES

Quantifying leaks is difficult because there is not any accurate means of doing so. Pipe material, size of the leak, system pressure, soil material and water table will affect the noise that a leak makes. Small leaks under high system pressure will make more noise than a large leak under low system pressure. However, the above leaks are of sufficient noise levels that the above estimates should be very conservative. If a production price of $1.45 per thousand gallons is used, these leaks were costing your utility in excess of $89.78 per day or $32,771.16 annually. It's obvious this Leak Survey Program has proven to be cost effective. Naturally the main line leaks have the greatest potential for loss followed by service line, valves, and finally hydrants. Once leaks have been repaired, we would recommend that the Utility compare pumping rates before and after. This information will be more meaningful and accurate.

RECOMMENDATIONS

This survey confirms the City of Joliet's water distribution system will benefit from this project by a reduction in underground leakage. There is always a concern over the cost effectiveness of leak detection because of the uncertainty of the number of leaks located. However, with your present cost of water and the discovery of these XX leaks, the cost of this 2013 leak survey will pay for itself within 2 months. It only takes a recovery of about 61,920 gallons per day on an annual basis (61,920 per day is only 43 gallons per minute throughout your entire water distribution system) to recover your investment. We would recommend that you conduct a Leak Survey Program every year. This recommendation becomes more critical as your cost of water increases.

We appreciate your cooperation and that of the Utility staff we were available to answer our questions during this project. If you have any questions with the information in this report, please do not hesitate to contact us.

Sincerely Yours,

Randy Lusk
Regional Manager – Dyer
RL/jph

M.E. SIMPSON COMPANY, INC.

LEAK LOCATION REPORT

Client: Joliet, Illinois **Time:** 10:00:00 AM **Leak#** 09

Date: Friday, January 24, 2014 **Tech:** Jerry R. & Blake G.

Address: Scott Street & Webster Street

Below is a diagram of the area surveyed for a suspect leak.

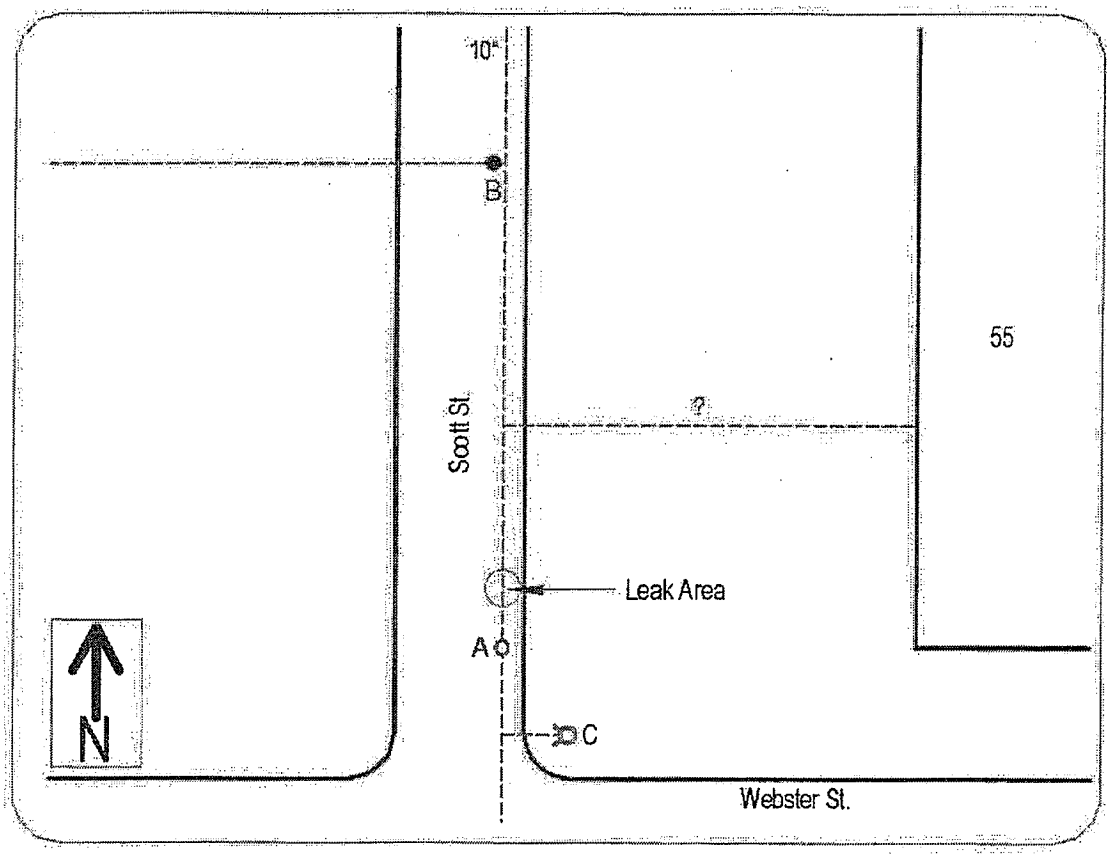

Distance: 114' from A to B / 147' from B to C

Connection point: A= Main Line Valve

Connection point: B= Fire Service Valve

Connection point: C= Hydrant

Connection point:

Leak Location: 13' from A

Comments: This is a leak on a 10" main.

We thank you for the opportunity to work for your Utility and look forward to serving you again. If you have any questions please don't hesitate to call.

M.E. SIMPSON COMPANY, INC.

LEAK LOCATION REPORT

Client: Joliet, Illinois **Time:** 10:30:00 AM **Leak#** 04

Date: Thursday, December 19, 2013 **Tech:** Jerry R. & Jacob P.

Address: 331 Joliet Street

Below is a diagram of the area surveyed for a suspect leak.

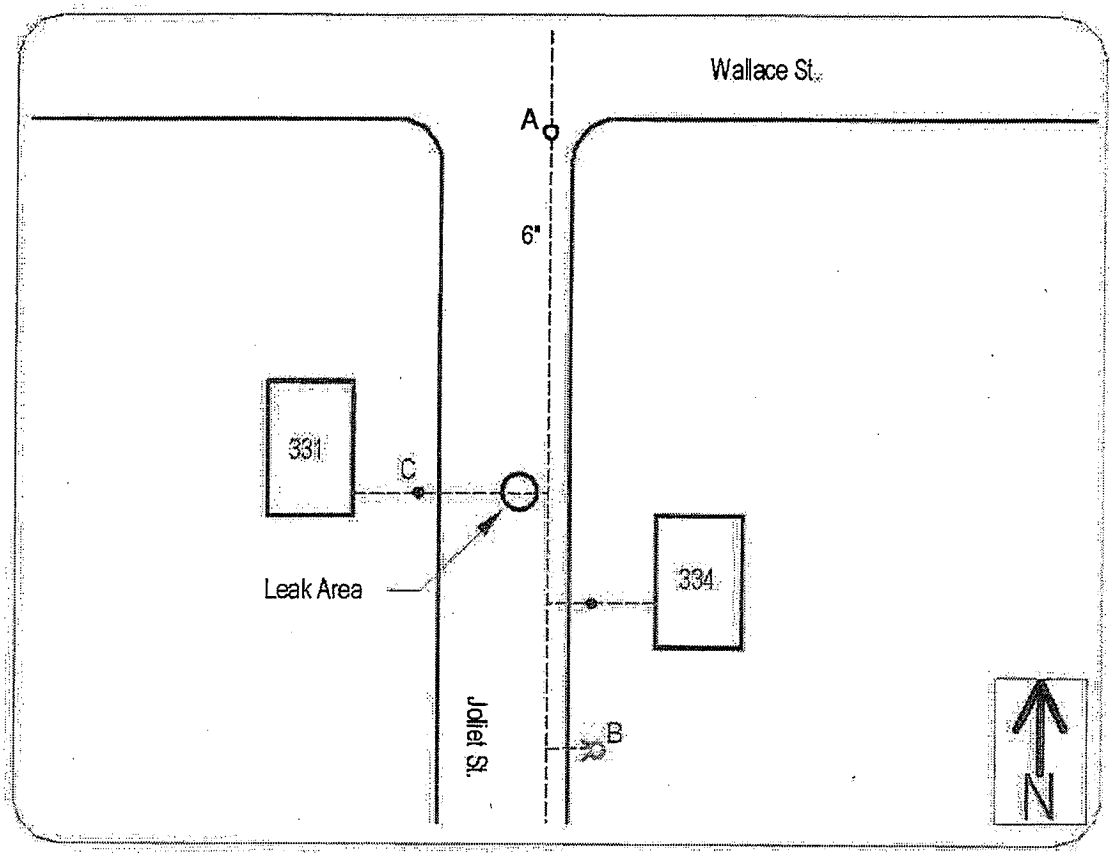

Distance: 635' from A to B / 116' from C to B

Connection point: A= Main Line Valve

Connection point: B= Hydrant

Connection point: C= Service Curbstop

Connection point:

Leak Location: 25' from C

Comments: This is a leak on the service line to 331 Joliet Street.

We thank you for the opportunity to work for your Utility and look forward to serving you again. If you have any questions please don't hesitate to call.

M.E. SIMPSON COMPANY, INC.

LEAK LOCATION REPORT

Client: Joliet, Illinois **Time:** 11:00:00 AM **Leak#** 08

Date: Wednesday, January 22, 2014 **Tech:** Jerry R. & Blake G.

Address: 457 Des Plaines Street

Below is a diagram of the area surveyed for a suspect leak.

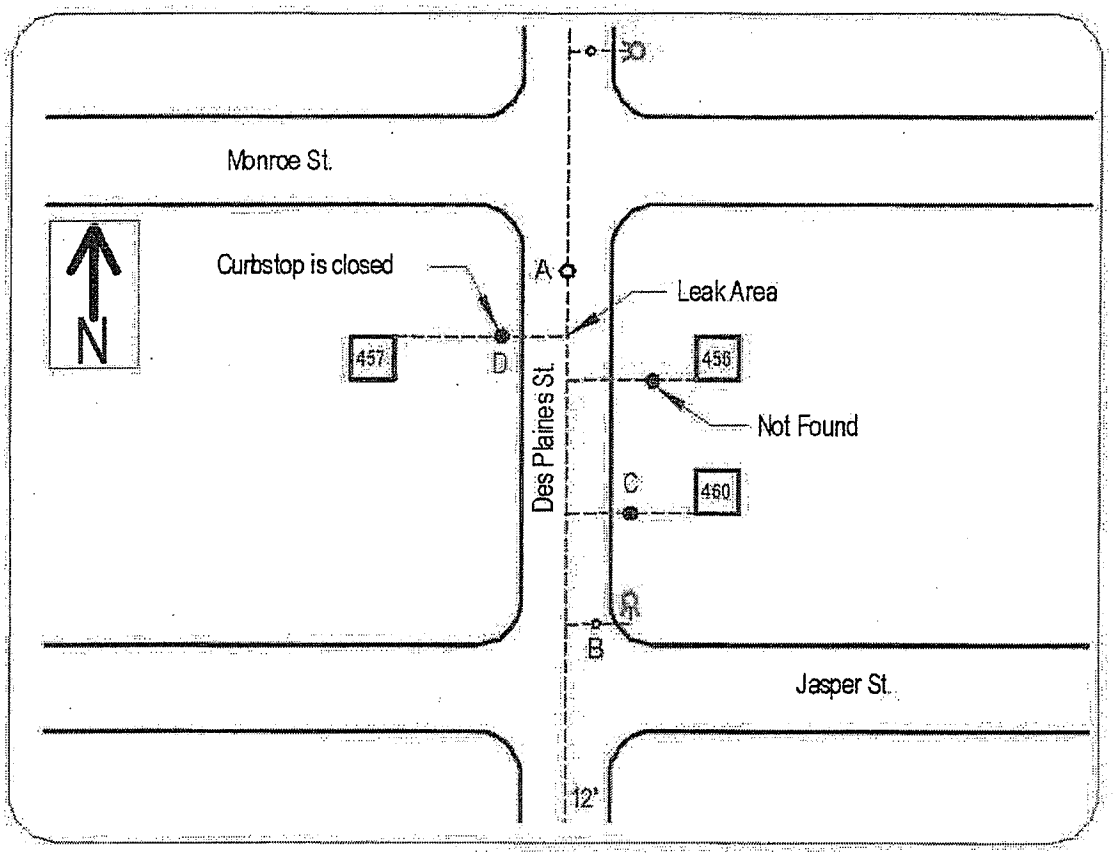

Distance: 314' from A to B / 228' from A to C / 129' from A to D

Connection point: A= Main Line Valve

Connection point: B= Hydrant Auxiliary Valve

Connection point: C= Service to 460

Connection point: D= Service to 457

Leak Location: 24' from D

Comments: This is a leak at the service corporation to 457 Des Plaines Street. This drawing is not to scale.

We thank you for the opportunity to work for your Utility and look forward to serving you again. If you have any questions please don't hesitate to call.

M.E. SIMPSON COMPANY, INC.

LEAK LOCATION REPORT

Client: Joliet, Illinois **Time:** 11:20:00 AM **Leak#** 05

Date: Thursday, December 19, 2013 **Tech:** Jerry R. & Jacob P.

Address: 6 & 8 Wallace Street

Below is a diagram of the area surveyed for a suspect leak.

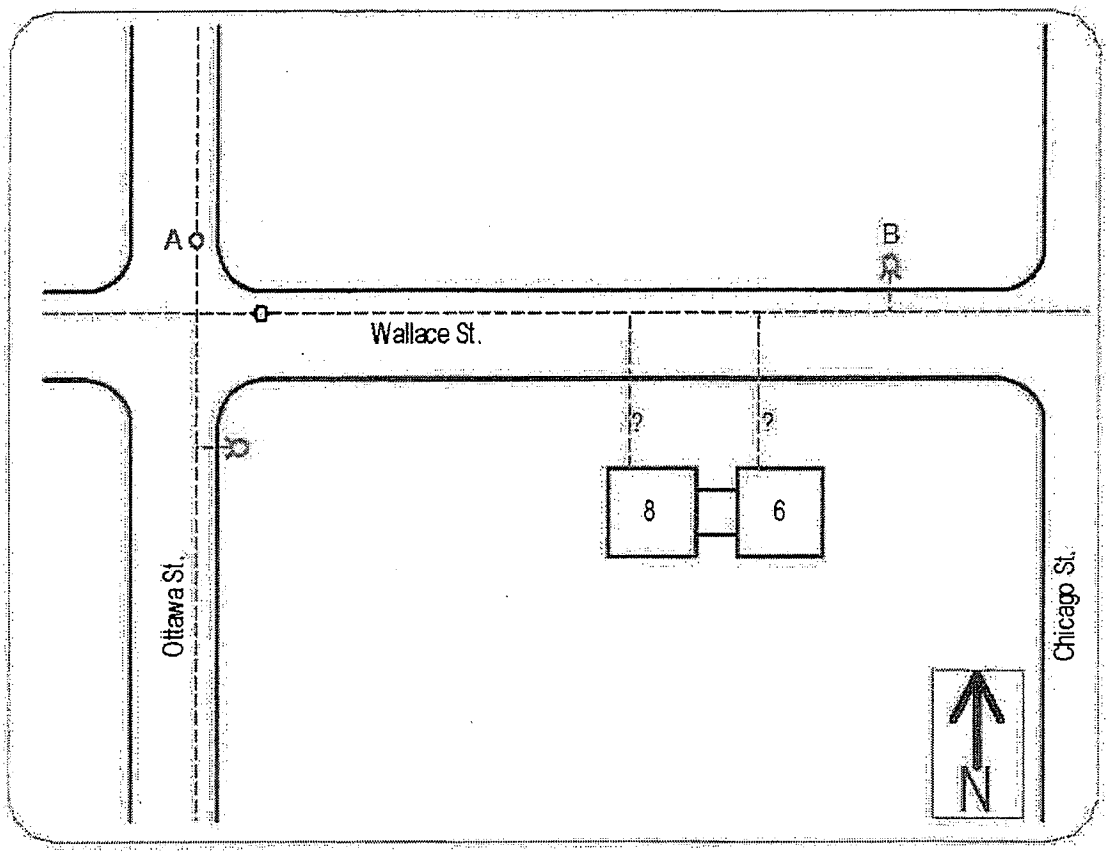

Distance: 238' from A to B

Connection point: A= Main Line Valve

Connection point: B= Hydrant

Connection point:

Connection point:

Leak Location: 180' from A

Comments: This is a leak on the service near 6 & 8 Wallace Street. We were unable to locate either of the services and need the water department to determine where the services are. After this, we can properly pinpoint the exact leak area. This drawing is not to scale.

We thank you for the opportunity to work for your Utility and look forward to serving you again. If you have any questions please don't hesitate to call.

M.E. SIMPSON COMPANY, INC.

LEAK LOCATION REPORT

Client: Joliet, Illinois **Time:** 10:00:00 AM **Leak#** 01

Date: Thursday, December 12, 2013 **Tech:** Jerry R. & Jacob P.

Address: Des Plaines Street & Washington Street

Below is a diagram of the area surveyed for a suspect leak.

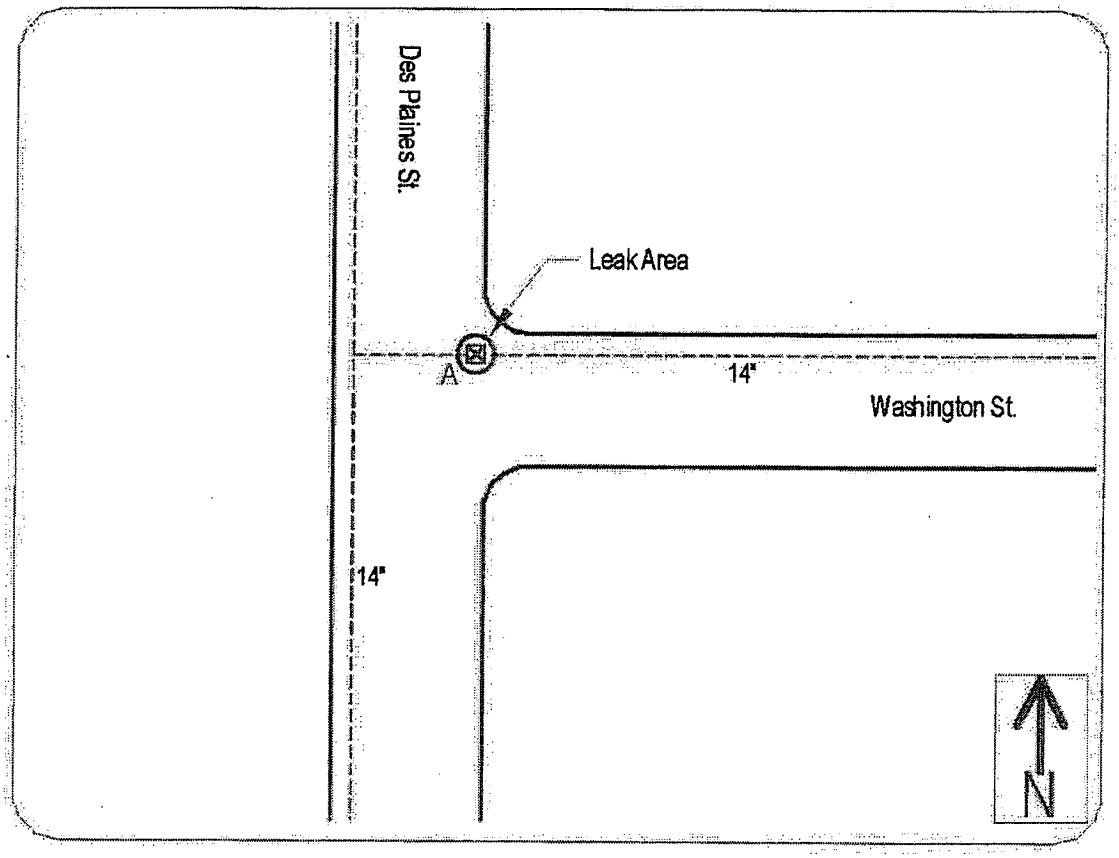

Distance: 0' from A

Connection point: A= Main Line Valve (in vault)

Connection point:

Connection point:

Connection point:

Leak Location: 0' from A

Comments: This is a packing leak on the main line valve.

We thank you for the opportunity to work for your Utility and look forward to serving you again. If you have any questions please don't hesitate to call.

M.E. SIMPSON COMPANY, INC.

LEAK LOCATION REPORT

Client: Joliet, Illinois **Time:** 11:00:00 AM **Leak#** 03

Date: Thursday, December 12, 2013 **Tech:** Jerry R. & Jacob P.

Address: Ottawa Street & Clinton Street

Below is a diagram of the area surveyed for a suspect leak.

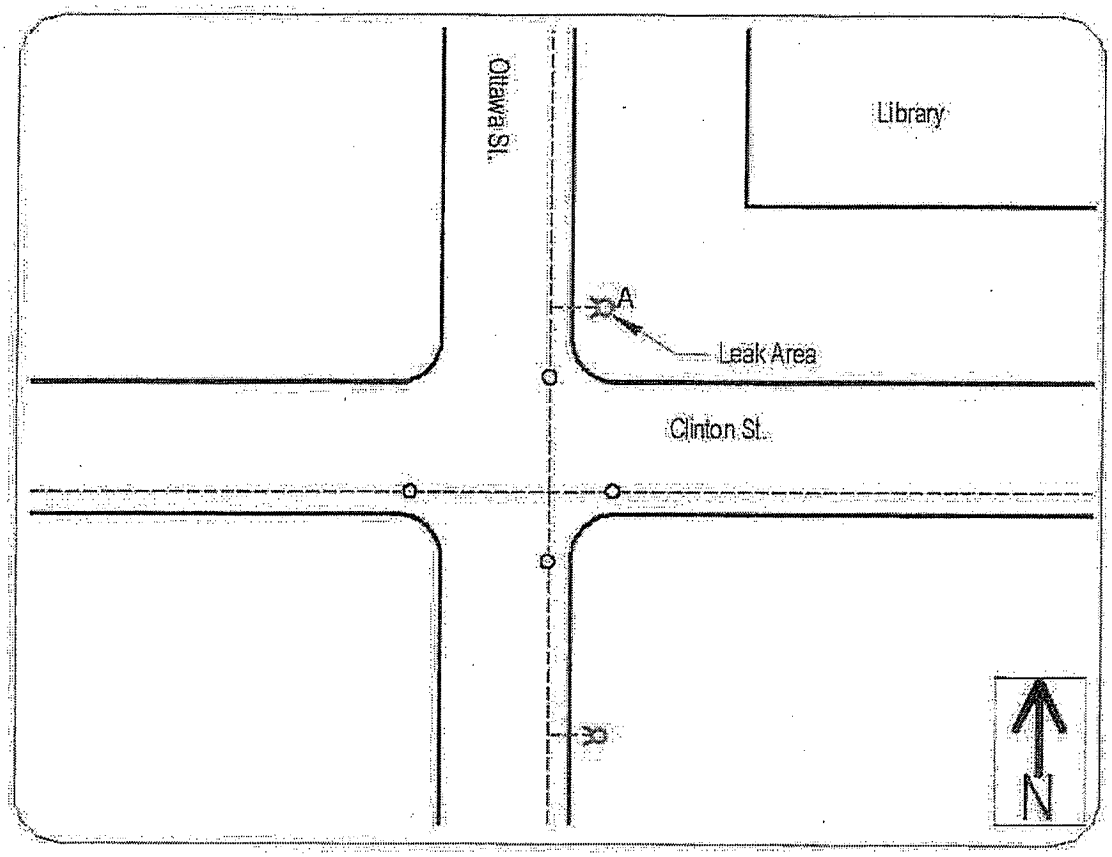

Distance: 0' from A

Connection point: A= Hydrant

Connection point:

Connection point:

Connection point:

Leak Location: 0' from A

Comments: This is a hydrant leak.

We thank you for the opportunity to work for your Utility and look forward to serving you again. If you have any questions please don't hesitate to call.

M.E. SIMPSON COMPANY, INC.

LEAK LOCATION REPORT

Client: Joliet, Illinois **Time:** 10:25:00 AM **Leak#** 02

Date: Thursday, December 12, 2013 **Tech:** Jerry R. & Jacob P.

Address: 150 West Jefferson Street

Below is a diagram of the area surveyed for a suspect leak.

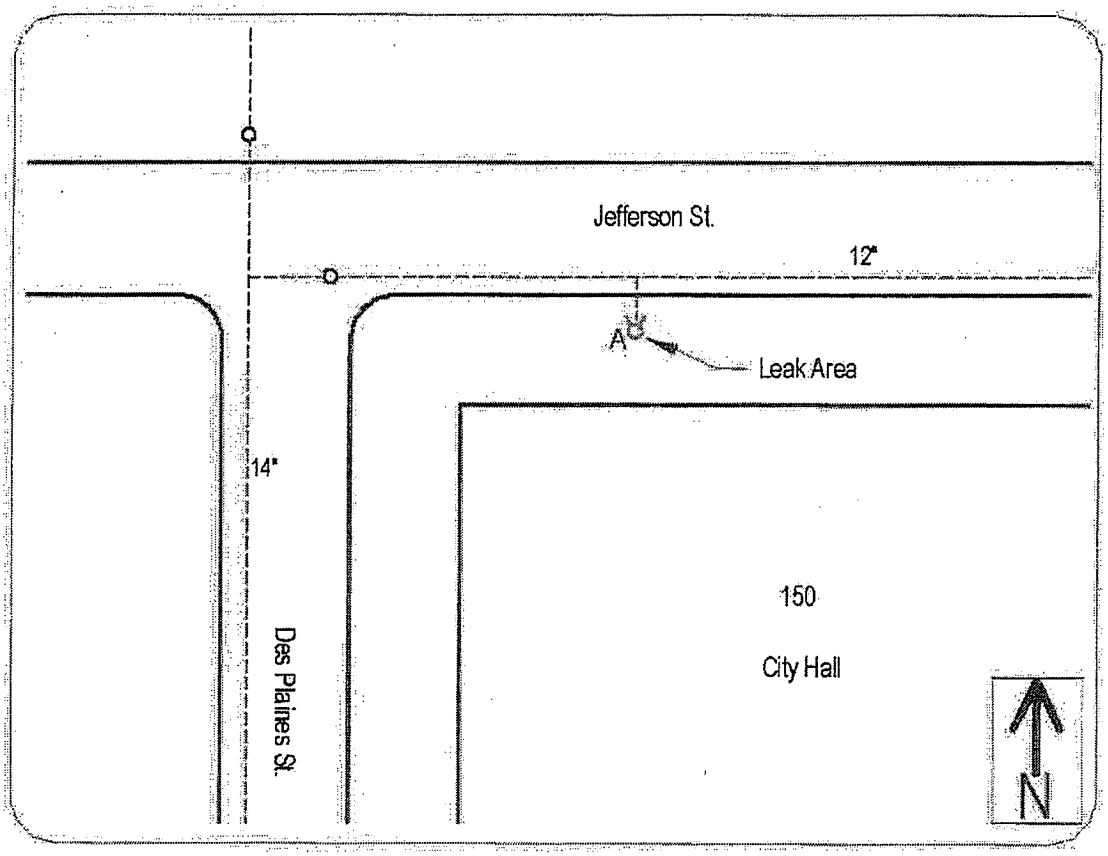

Distance: 0' from A

Connection point: A= Hydrant

Connection point:

Connection point:

Connection point:

Leak Location: 0' from A

Comments: This is a hydrant leak.

We thank you for the opportunity to work for your Utility and look forward to serving you again. If you have any questions please don't hesitate to call.

M.E. SIMPSON COMPANY, INC.

LEAK LOCATION REPORT

Client: Joliet, Illinois **Time:** 9:20:00 AM **Leak#** 06

Date: Wednesday, January 22, 2014 **Tech:** Jerry R. & Blake G.

Address: 95 Chicago Street (S)

Below is a diagram of the area surveyed for a suspect leak.

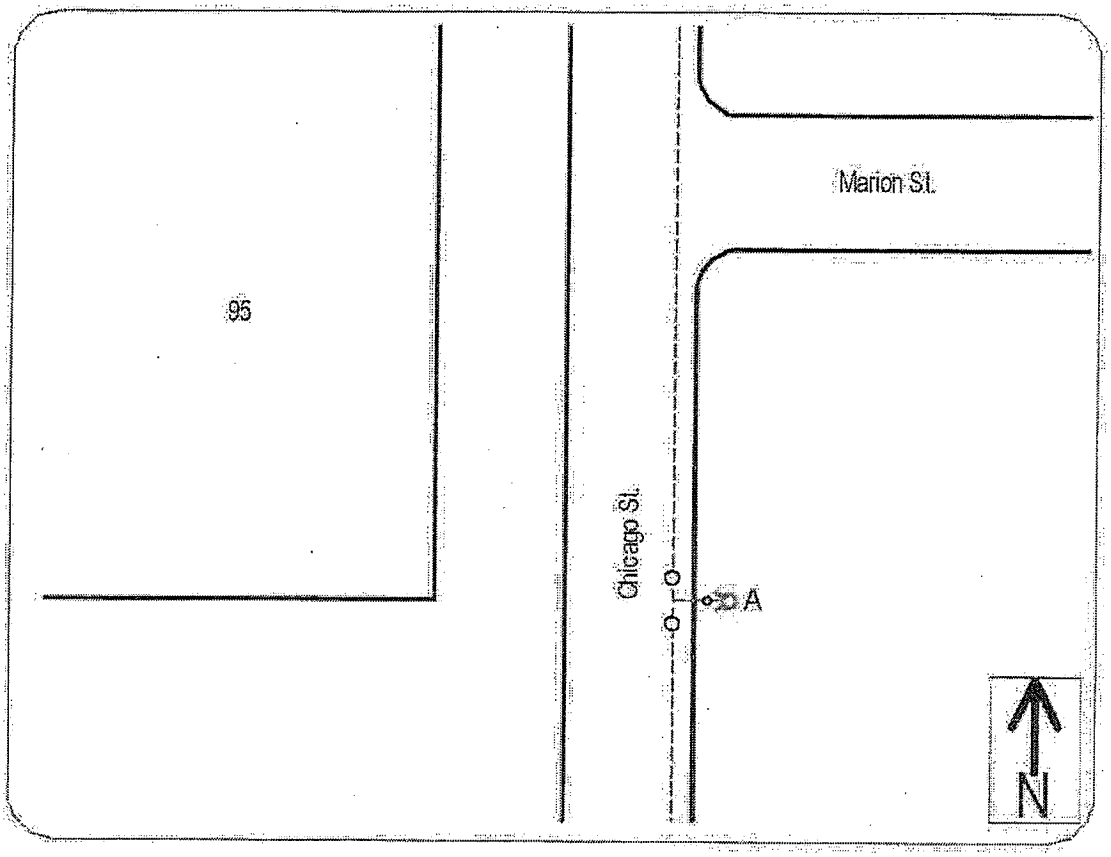

Distance: 0' from A

Connection point: A= Hydrant

Connection point:

Connection point:

Connection point:

Leak Location: 0' from A

Comments: This is a hydrant leak.

We thank you for the opportunity to work for your Utility and look forward to serving you again. If you have any questions please don't hesitate to call.

M.E. SIMPSON COMPANY, INC.

LEAK LOCATION REPORT

Client: Joliet, Illinois **Time:** 10:00:00 AM **Leak#** 07

Date: Wednesday, January 22, 2014 **Tech:** Jerry R. & Blake G.

Address: Chicago Street & New Street

Below is a diagram of the area surveyed for a suspect leak.

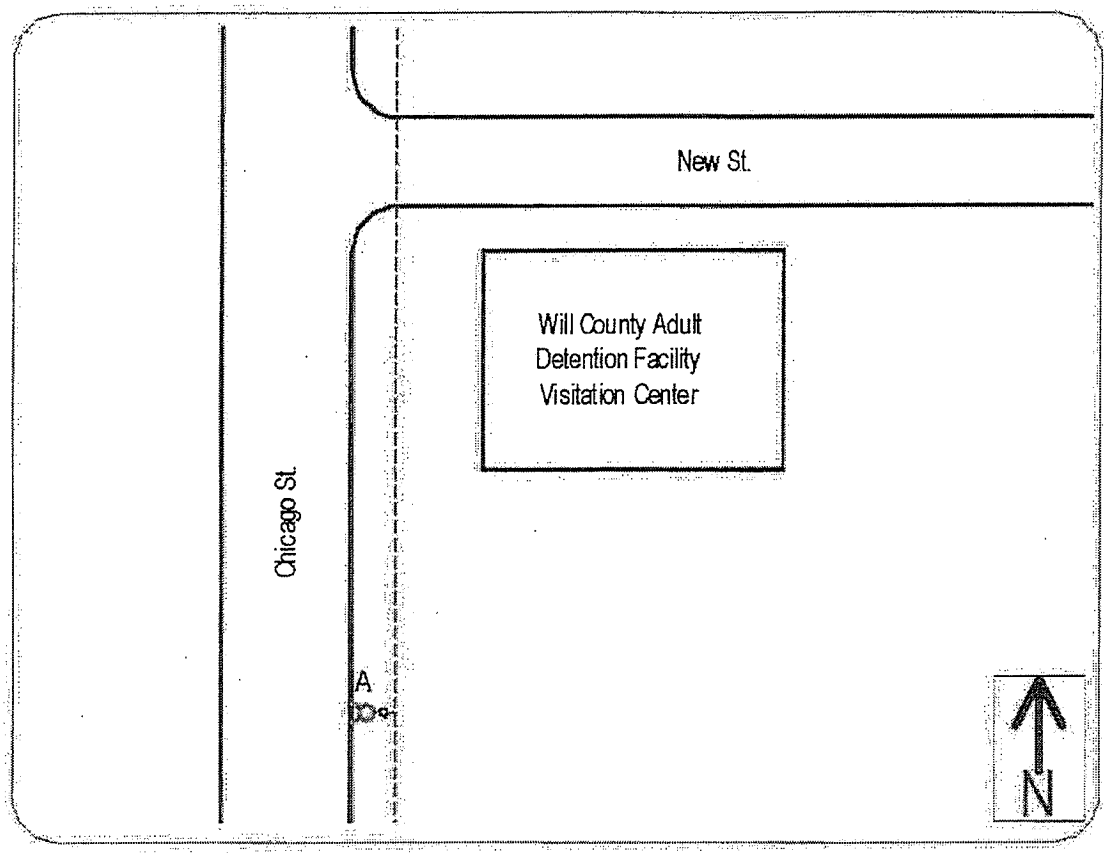

Distance: 0' from A

Connection point: A= Hydrant

Connection point:

Connection point:

Connection point:

Leak Location: 0' from A

Comments: This was a hydrant leak. We tightened the hydrant operating nut and the leak noise quit. This leak is fixed.

We thank you for the opportunity to work for your Utility and look forward to serving you again. If you have any questions please don't hesitate to call.

M. E. Simpson Company, Inc. - Leak Survey Log

Leak Survey Client:		Joliet, Illinois						Technicians:	Jerry, Jacob, & Blake		
Map Page or Section #	Street	Cross Street	Date of Initial Listening	Date of Pinpoint	Listening Point (H,V,S,P)	Leak (Y / N)	Leak Fixed? (Y / N)	Leak Type (Main, Service, Hydrant, Valve)	Noise Source (Hydrant)	GPM	Leak DWG # (Field Sketch)
1	[illegible] Hyline Street	Washington Street	[illegible]	[illegible]	Valve	Yes	No	Valve		2	1
7	Jefferson Street	[illegible] Jefferson Street	[illegible]	[illegible]	Hydrant	Yes	No	Hydrant		1	2
7	Clinton Street	Clinton Street	[illegible]	[illegible]	Hydrant	Yes	No	Hydrant		3	3
7	Ottawa Street	Webster Street	[illegible]	[illegible]	Private Valve	No			Traffic		
7	Joliet Street	Jefferson Street	[illegible]	[illegible]	Valve	No			Traffic		
7	Mott Street	[illegible] Mott Street	[illegible]	[illegible]	Hydrant	Yes	No	Service		5	4
7	Wallace Street	[illegible] Wallace Street	[illegible]	[illegible]	Service Valve	Yes	No	Service		3	5
7	Cherry Street	[illegible] Cherry Street	[illegible]	[illegible]	Hydrant	Yes	No	Hydrant		1	6
7	Chicago Street	[illegible] Street	[illegible]	[illegible]	Hydrant	Yes	Yes	Hydrant		1	7
7	Scott Street	Webster Street	[illegible]	[illegible]	Private Valve	Yes	No	Main		20	8
7	[illegible] Hubert Street	[illegible] Del Plaines Street	[illegible]	[illegible]	Hydrant	Yes	No	[illegible]		4	9
7	Hickory Street	Jackson Street	[illegible]	[illegible]	Hydrant	Yes	No	Service		5	10
7	Cedar Street	[illegible] Lacon Street	[illegible]	[illegible]	Hydrant	Yes	No	Hydrant		5-10	11
7	Water Street	Shelby Street	[illegible]	[illegible]	Hydrant	Yes	No	Main		20	12

Water Department

NB #3
CC 7/21/16

Memo

To: Jim O'Toole, City Manager

From: Jeff Lampi, W / WWTP Supt.

CC: Melissa Becotte, City Controller

Date: 7/12/16

Re: Leak Detection Survey

Davies

RFP's have been sent and received for leak detection services. Three responses have been submitted. Because we have not had much experience with leak detection, we requested two different individuals to be our "third party review" of the RPF's and provide a recommendation of whom to hire. Both parties' recommended different vendors, one based off price alone (M.E. Simpson) & one based off knowledge of the company, performance, and proximity to us (Davies Water).

Bids received:

American Leak Detection, Paw Paw, MI;		$30,000.00
M.E. Simpson co, Inc; Valparaiso, IN;	**This Summer:**	**$14,000.00**
Davies Water (a division of) Ferguson, Appleton, WI		$26,000.00
	One Sweep next year:	**$13,000.00**

I would like to hire both vendors that have been recommended by the third party review, to each do one sweep of our entire system. I would like to have one vender work this summer, and the second next year before the end of June. This approach will help us create a better understanding of leak detection technology, and also provide two different methods to solve our current problem. (I've been told that finding this much water lose will be a long term goal, which may take a several sweeps and years to accomplish.)

Please consider this a request for approval to retain the services of M.E Simpson Co., Inc; of Valparaiso, IN not to exceed **$14,000.00** and also Davies Water, a division of Ferguson; of Appleton, WI not to exceed **$13,000.00**. Money has been budgeted for this activity in this current budget year.

LEAK DETECTION

CITY OF ESCANABA

2016-2017 Water Fund Budget Request Workpaper

Fund Number 333 Activity Number 000

REQUEST FOR CAPITAL EXPENDITURES

		Description of Request	Actual 2013-14	Actual 2014-15	Estimate 2015-16	Budget 2015-16	Request 2016-17	Recommended 2016-17	Final 2016-17	$ Change Col. 7-Col. 4	% Change Col. 7-Col. 4
		VFD on Influent Pumps				18,000	0	0	0	(18,000)	-100.00%
		Boiler System Replacement/Upgrade				50,000	0	0	0	(50,000)	-100.00%
		Breakroom Expansion / Bathroom Relocation				15,000	0	0	0	(15,000)	-100.00%
		Roof Ladders / Fall Protection				6,000	0	0	0	(6,000)	-100.00%
		Replace Cl2 Regulators & Ejectors				20,000	20,000	20,000	20,000	0	0.00%
541-136	-000	Structures and Improvements	0	3,450	22,000	109,000	20,000	20,000	20,000	(89,000)	-81.65%
		pH Meter				0	0	0	0	0	0.00%
541-140	-608	Laboratory Equipment	0	1,307	0	0	0	0	0	0	0.00%
		Pipe Boring Machine & Push Box (Share with Electric Dept)				30,000	0	0	0	(30,000)	-100.00%
		Small Hydrant Pipe				600	0	0	0	(600)	-100.00%
		Electric Pallet Jack				6,000	0	0	0	(6,000)	-100.00%
541-140	-612	Tools & Equipment	8,348	0	3,400	36,600	0	0	0	(36,600)	-100.00%
		Computer Upgrades				0	0	0	0	0	0.00%
541-146	-100	Office Equipment & Furniture	2,124	0	0	0	0	0	0	0	0.00%
		GIS Water System				0	33,000	30,000	30,000	30,000	NEW
		Replace Service Lines				10,000	10,000	10,000	10,000	0	0.00%
		Install Mixers in Water Towers				0	80,000	80,000	80,000	80,000	NEW
		Leak Detection				0	30,000	30,000	30,000	30,000	NEW
541-152	-00X	Transmission/Distribution Mains	1,200	0	8,000	10,000	153,000	150,000	150,000	140,000	1400.00%
		New Meters				40,000	80,000	130,000	130,000	90,000	225.00%
		Large Meter Replacement				20,000	20,000	20,000	20,000	0	0.00%
		City Wide Meter Replacement				0	450,000	0	0	0	0.00%
541-152	-005	Meters	52,580	61,650	60,000	60,000	550,000	150,000	150,000	90,000	150.00%
		TOTAL CAPITAL OUTLAY	64,252	66,407	93,400	215,600	723,000	320,000	320,000	104,400	48.42%

CITY OF ESCANABA
RECORD OF BIDS

DATE BIDS OPENED: 6/28/2016

DESCRIPTION OF ITEM: Escanaba Water Department Leak Detection

NAME OF BIDDER	ALL INCLUSIVE LEAK DETECTION SURVEY	ANY ADDITIONAL COST	TOTAL	CHECK OR BID BOND
M.E. Simpson Co. Inc.	14,000	Ø	14,000	Bond
Ferguson Waterworks	26,000	700	26,700	Bond
American Leak Detection	30,000	Ø	30,000	Check 3,000

PRESENT:

DAVIES WATER
A division of
FERGUSON
a WOLSELEY company

7-24- 2016

Experience.

John Paalman	**17 years in water leak detection. Plastic and iron**
Steve Neumann	**13 years in water leak detection. Plastic and iron**

CUSTOMER REFERENCES

Mark Nollenburg	Waupaca Water	715-258-4423
Bill Caberly	Nekoosa Water	715-459-1857
Eric Zagyrlicke	Depere Water	920-574-1443
Travis Thull	West Bend	262-483-4186
Vance Henning	Brandon Water Utilities	920-960-9727
Todd Prahl	Grand Chute Water	920- 419-2531

More references available upon request.

Total systems wide surveys done in the past two years.
West Bend WI
Depere WI
Mosinee WI
Nekoosa WI
Jefferson WI
Waupaca WI

More references available upon request.

Sincerely,

John Paalman
Davies Services

5350 North Richmond Street • Appleton, Wisconsin 54913 • Phone: 920-731-3252 • Fax: 920-731-2305

We the undersigned, agree to furnish the City of Escanaba, Michigan **RFP: Escanaba Water Department Leak Detection – 2016,** in accordance with the attached minimum specifications, which are part of this proposal, at the following price:

Provide an all-inclusive Leak Detection survey of the entire Distribution System & City owned Service: $ 26,000.00

Any Additional cost not mentioned: $ 700.00

Please provide a detailed description of any additional costs: Emergency Leak Detection if needed

FOB: City of Escanaba

CERTIFIED CHECK, CASHIER'S CHECK, OR BIDDER'S BOND ENCLOSED IN THE AMOUNT OF: $ 2600.00

(Must be included to qualify)

SUBMITTED BY:

FIRM: Ferguson Waterworks DBA Davies Services

ADDRESS: 5350 N Richmond ST
Appleton WI 54913

BY: John Aalman

PRINTED NAME: [illegible] TITLE: Services Manager

(Business Address Seal- if bid is by a corporation)

RFP: Escanaba Water Department Leak Detection – 2016

BID BOND

KNOWN TO ALL MEN BY THESE PRESENTS, that we, the undersigned, _____ as principal and _____, as Surety, are hereby held and firmly bound unto the City of Escanaba, Delta County, Michigan, as Owner in the penal sum of _____ for the payment of

Date 6-24-16

Proposal of Ferguson Waterworks, (hereinafter called Bidder), a corporation, organized and existing under the laws of the State of VA, doing business as Davies Services. To the City Council, City Hall, P.O. Box 948 , City of Escanaba, Michigan, (hereinafter call Owner).

The Bidder, in compliance with the advertisement for bids and specifications for the **RFP: Escanaba Water Department Leak Detection – 2016**, having examined the plans and specifications with related documents and the site of the proposed work, and being familiar with all of the conditions surrounding the construction of the proposed project including the availability of materials and labor, hereby proposed to furnish all labor, materials, and supplies and to construct the project in accordance with the contract documents, within the time set forth therein, and at the price and/or prices stated below. These prices are to cover all expenses incurred in performing the work required under the contract documents, of which this proposal is part.

Exact dates of this project shall be coordinated with the City of Escanaba W-WW Superintendent prior to start of any construction.

The City of Escanaba reserves the right to delete part of or negotiate directly with any and all bidders concerning any matter related to any bid.

The Bidder acknowledges receipt of the following addendum:

_____ Dated: _____

_____ Dated: _____

_____ Dated: _____

PROPOSAL

RFP: Escanaba Water Department Leak Detection – 2016

Date: 6-24-16

City of Escanaba, PO Box 948, Escanaba, MI 49829

DAVIES WATER
A division of
FERGUSON
a WOLSELEY company

Any contracts will be reviewed and approved by Ferguson

Leak Detection Survey Proposal

Escanaba, MI

A. Introduction

This Proposal describes the services that will be provided to conduct a Leak Detection Survey of approximately 80 Miles of water main in the City of Escanaba Mi water distribution system.

B. Scope

Services to be provided for the project are as follows:

1. Conduct a leak detection and location survey with sonic detection and computer correlation equipment and leak noise data loggers on the entire water distribution system. The survey will be conducted utilizing the following two methods:

    a. **For metal** water mains approximately 80 miles, physical contact will be made with the system at all fire hydrants. As leaks are found the valves and services will be used as necessary. The leak correlator and data logging equipment would then be used to pinpoint the leaks.

2. After the initial sonic leak survey of a portion of the system is completed, indications of leaks will be verified a second time, after which leaks will be located with a computer programmed leak correlator and the leak noise loggers.

3. This survey will be conducted primarily during normal working hours with additional leak detection being conducted during late evening and/or early morning hours in areas of high traffic volume.

5350 North Richmond Street • Appleton, Wisconsin 54913 • Phone: 920-731-3252 • Fax: 920-731-2305

4. A daily report of any leaks will be provided. Hydrant leaks will need to be fixed in a timely manner so areas may be rechecked for underlying leaks.

5. Prepare a final report with the results of our findings. The final report will contain recommendations for future work based on the results of this survey.

C. Schedule

Field Investigations	2-3 weeks
Final Report	2-3 weeks after fieldwork

D. Client's Responsibilities

Client, at its expense, shall provide Davies Services the following information and assistance in a timely manner so as not to delay the project.

1. All available street maps, water distribution system maps.

2. One (1) experienced person with a good working knowledge of the water distribution system to assist on a **part-time** basis in field activities such as location of system components. We will call if needed.

3. Clearly mark and provide access to valves and curb stops by uncovering and cleaning valves and curb boxes where required prior to initiation of field activities as needed.

E. Compensation

Sweep of entire system and pinpoint leaks. To be done in 2016 with report.
Spring 2017 Sweep of entire system to find any new leaks and recheck after 2016 repairs are made
Pinpoint any leaks found.
13000.00 for each sweep
We do not have GIS so we will mark leaks with paint and will be on site for excavation If possible.

The total cost to conduct the Leak Detection Survey will be **$ 26,000.00**
Included
Two emergency leak detection calls at no charge winter of 2016- spring 2017
Payment will submitted when each Phase is complete.

Best regards,

John Paalman

Wastewater Department

NB#4
CC 7/21/16

Memo

To: **Jim O'Toole, City Manager**

From: Jeff Lampi, W & WWTP Supt.

Date: 7/12/16

Re: Eco-Mat Pilot Plant

I have briefly discussed with you a new concept in Wastewater technology that I would like to investigate more deeply. Currently we are using wastewater treatment concepts from the early 1900's here in Escanaba. Today we have current needs of plant improvements that may very likely exceed six million dollars.

Blue Waters Technologies, has approached us regarding a possible solution for what may be a more cost effective approach for the required wastewater plant improvements here in Escanaba. They are proposing the use of a rotating filter belt to replace the current grit machine, the primary clarifier's, and also the anaerobic digesters. These three items, account for nearly two-thirds of our current process design here in Escanaba.

I feel this new technology truly needs to be analyzed and considered before refurbishing the existing plant layout. To do so, we will need to implement a small scale pilot plant program. Conducting this study, will create hard data which will be needed to make informed decisions. Each pilot plant program will cost $7,500.00 to conduct, and I would like to schedule two of them. One will be conducted during the warm weather this summer, and a second one this winter during the cold weather months.

Two studies will provide not only redundancy and replication of the study, but also prove or dis-prove possible year-round operational success. Other unknown cost will be incurred, such as lab analyses, hiring of an electrician, and the purchasing of any other materials needed for the pilot. I feel these combined costs will not exceed $17,000.00.

However; If the first warm weather pilot does not provide any promise, we will not concern ourselves with the expenses of conducting the second cold weather pilot.

With your approval I would like to hire Blue Water Technologies of Hayden, ID to conduct two separate pilot plant programs for the Eco-Mat Rotating Belt Filter system at a cost of $7,500.00 each. Total monies spent on this project **will not exceed $17,000.00**. Money is not budgeted for this activity, but is available from the wastewater fund.

Pc: Melissa Becotte, City Controller

Eco-Mat Rotating Belt Filter System

Blue Water Technologies, Inc.

Pilot -Demo Proposal

Blue Water Technologies, Inc.
10450 N. Airport Drive
Hayden, ID 83835-9742
www.bluewater-technologies.com

June 8, 2016

Jeff Lampi
Escanaba WWTP
P.O. Box 948
Escanaba, MI 49829

Subject: **160134-P1-1 ESCANABA WWTP, MI PILOT PROPOSAL**
Pilot Proposal

Dear Mr. Lampi:

Attached please find Blue Water's pilot proposal for your project. Blue Water provides a dynamic team approach with the resources and expertise required to address and satisfy all aspects of this project.

The proposed system will include an EcoMAT® Rotating Belt Filter system with ancillary equipment per this proposal for operation. This system is designed by Blue Water to effectively provide primary and preliminary treatment for wastewater. Throughput on the pilot will be used to scale to full-scale flow design.

Thank you for your consideration on this project. Please contact me at your convenience if you have any questions or need additional information.

Regards,

Robin Schroeder
Business Development Manager
Cell: (225)620-2376
rschroeder@bluewater-technologies.com

Paul Nygaard
The ICS Group
(920) 6764835
pauln@theicsgrp.com

Corporate
PH: (888) 710-2583
FAX: (208) 209-0396

Agreed by: Date:

Name, Title

Purchase Order:

2016 – Blue Water Technologies Inc. - Confidential & Proprietary

Blue Water Technologies, Inc.
10450 N. Airport Drive
Hayden, ID 83835-9742
www.bluewater-technologies.com

Contents

1 EQUIPMENT AND SERVICE PRICING 3
1.1 Blue Water Pricing – Eco MAT Pilot 3
1.2 Notes and Considerations 3
1.3 Logistics and Shipping 3
1.4 Payment Terms 3
1.5 Validity 3
2 SCOPE OF WORK 4
2.1 Pilot Laboratory and Analytical Responsibilities for Pilot 4
2.2 Scope of Work by Client 4
2.3 Scope of Work by Blue Water 4
3 BASIS OF PILOT – ECO MAT 5
3.1 Water Quality 5
3.2 Equipment Model 5

2016 – Blue Water Technologies Inc. - Confidential & Proprietary

1 EQUIPMENT AND SERVICE PRICING

1.1 Blue Water Pricing – Eco MAT Pilot

Staffed Equipment & Service one week (inclusive)	**$7,500.00**

1.2 Notes and Considerations

1.2.1 Commissioning will occur during the first day of the first week onsite, and decommissioning will occur by the end last day onsite.

1.2.2 A day is defined as an 8-hour work day.

1.2.3 All pricing is in U.S. Dollars.

1.2.4 Equipment is **F.O.B. Jobsite, USA.**

1.2.5 The price does not include any import, sales, use, excise or similar taxes, fees, permits, etc.

1.3 Logistics and Shipping

Blue Water is proposing that the demonstration system be delivered to the project location at a time **TBD**, and readied for treatment during that week. While drawings may be issued for information, they are intended for informational purposes only. The drawings will remain Blue Water's property and may not be used by others for distribution and/or fabrication.

1.4 Payment Terms

100% upon receipt of Purchase Order.

1.5 Validity

This proposal is valid for a period of thirty (30) days unless extended in writing by Blue Water.

2016 – Blue Water Technologies Inc. - Confidential & Proprietary

Blue Water Technologies, Inc.
10450 N. Airport Drive
Hayden, ID 83835-9742
www.bluewater-technologies.com

2 SCOPE OF WORK

2.1 Pilot Laboratory and Analytical Responsibilities for Pilot

During the course of the demonstration, the customer will be responsible for third-party laboratory fees incurred in order to collect data for the performance evaluation of the equipment. In addition to third-party analysis, Blue Water maintains an operations logsheet with equipment settings and additional field parameters. Summary of daily testing required will be communicated as an attachment to this proposal.

2.2 Scope of Work by Client

- 2.2.1 Responsibilities regarding analysis and associated costs.
- 2.2.2 Site preparation, unloading, placement and installation of equipment.
- 2.2.3 Power supply and connection of electrical service to Blue Water supplied control panel.
- 2.2.4 Process inlet flow to the pilot system per Basis of Design. Plumbing, unless noted, to the pilot feed.
- 2.2.5 The pilot should be located as close as possible (maximum of 50') to the influent, effluent and reject locations, and gravity flow should be available to these pilot discharge receiving points following treatment.
- 2.2.6 Chemicals required for operation (as required TBD).
- 2.2.7 Potable water supply @ 8 gpm for process needs and cleanup (garden hose is sufficient).
- 2.2.8 Disposal of any collected solids or backwash water.

2.3 Scope of Work by Blue Water

- 2.3.1 Commissioning of Blue Water supplied pilot equipment.
- 2.3.2 Manned daily operation of pilot equipment.
- 2.3.3 Sampling of process water streams per the agreed operations plan.
- 2.3.4 Decommissioning, cleaning, and repackaging of Blue Water pilot equipment.
- 2.3.5 Pilot report summarizing operating conditions and performance due within 30 days after final receipt of third-party laboratory analysis.

why do we have to set up
what Power Source?

2016 – Blue Water Technologies Inc. - Confidential & Proprietary

Blue Water Technologies, Inc.
10450 N. Airport Drive
Hayden, ID 83835-9742
www.bluewater-technologies.com

3 BASIS OF PILOT – ECO MAT

3.1 Water Quality

Parameter	Influent[1]	Effluent[1]	Units
Average Flow	21		gpm
Instantaneous Peak Flow	35		gpm
Minimum Flow	7		gpm
pH	6 to 8		
Alkalinity	75 to 150		mg/L
Temperature	32 to 110		°F
Total Solids (TS)	< 180	Less 30 to 80%	mg/L
Biochemical Oxygen Demand (BOD)	< 150	Less 10 to 50%	mg/L

Notes:

1. Monthly Arithmetic average. Pilot performance will be assessed within design conditions.

3.2 Equipment Model

Model:	EM-3
Equipment weight dry:	1,200 lb (545 kg)
Operating weight:	1,500 lb (680 kg)
Maximum wash water required:	2.3 gpm (0.15 L/s)
Belt drive gear motor (on VFD):	1 hp
Auger drive gear motor (on VFD):	1 hp
Belt cleaning booster pump:	1 hp
Equipment power draw:	1.0 kW average; 5.0 kW max draw

Equipment Notes:

- See equipment setup sheets for equipment dimensions and weights.
- Wash water can be operated intermittently and continuously depending on the need. Intermittent hot water is available to cut oils and grease lasting for programmable durations. Programmable frequency for the hot water ranges from once daily to multiple times per hour for high FOG.
- Water supply line to the filter system (with backflow protection, if required) will be provided by others unless options is specified. The supply must be capable of providing a flow of 3 gpm at a continuous pressure of at least 60 psig while the EM3 is in operation. Integral particle screening to guarantee < 0.5 NTU turbidity and < 30 micron entrained particle size. Water scaling tendencies will be quantified using the Ryznar Stability Index. Ryznar Stability Index values will be between 6.0 and 7.0

2016 – Blue Water Technologies Inc. - Confidential & Proprietary

Eco-Mat Rotating Belt Filter System

Blue Water Technologies, Inc.

Project - Budget Proposal

Blue Water Technologies, Inc.
10450 N. Airport Drive
Hayden, ID 83835-9742
www.bluewater-technologies.com

June 8, 2016

Jeff Lampi
Escanaba WWTP
P.O. Box 948
Escanaba, MI 49829

Subject: **160149-C1-1 ESCANABA WWTP, MI PROPOSAL**
Budget Proposal

Dear Mr. Lampi:

Please find attached Blue Water's technical and economic proposal for your project. Blue Water provides a dynamic team approach with the resources and expertise required to address and satisfy all aspects of this project. The proposed EcoMAT® rotating belt system will satisfy the design envelope described in Section 1 under this cover to remove TSS and associated BOD.

Thank you for your consideration on this project. Please contact me at your convenience if you have any questions or need additional information.

Sincerely,

Robin Schroeder
Business Development Manager
Cell: (225)620-2376
rschroeder@bluewater-technologies.com

Paul Nygaard
The ICS Group
(920) 6764835
pauln@theicsgrp.com

Corporate
PH: (888) 710-2583
FAX: (208) 209-0396

2016 – Blue Water Technologies Inc. - Confidential & Proprietary

Blue Water Technologies, Inc.
10450 N. Airport Drive
Hayden, ID 83835-9742
www.bluewater-technologies.com

Contents

1 BASIS OF DESIGN 3
1.1 Water Quality 3
1.2 Process Narrative 3
1.3 Process Diagram 3
1.4 Safety 4
1.5 Equipment Warranty 4
2 PRICING AND COMMERCIAL DELIVERY 4
2.1 Blue Water Pricing 4
2.2 Notes and Considerations 4
2.3 Delivery 4
2.4 Payment Schedule 4
2.5 Validity 4
3 Eco MAT EQUIPMENT NARRATIVE AND SCOPE 5
3.1 Scope List 5
3.2 Documentation 5
3.3 Commissioning and Startup 5
3.4 Electrical Control Panel and PLC 6
3.5 Blue Water's Eco MAT™ RBF 6
3.6 Special Considerations 6
4 SCOPE OF SUPPLY BY OTHERS 6
5 TERMS AND CONDITIONS 7

2016 – Blue Water Technologies Inc. - Confidential & Proprietary

1 BASIS OF DESIGN

1.1 Water Quality

Parameter	Influent[1]		Effluent[1]
Average Flow	2.2	MGD	
Instantaneous Peak Flow	5.0	MGD	
pH	7		
Alkalinity	50 to 150	mg/L	
Total Suspended Solids (TSS)[2]	< 180	mg/L	Less 50%
Biochemical Oxygen Demand (BOD)	< 150	mg/L	Less 30%
Ambient Temperature	70	°F	
Water Temperature	75	°F	

1. Monthly Arithmetic average. Pilot performance will be assessed within design conditions.
2. The sludge estimates are generated using the TSS and design flows given above. Adequate handling capacity should be added for infrequent flow or solids peaking events that may occur.

275 lb/h	at average flow and	25% dry solids.
626 lb/h	at peak-hour flow and	25% dry solids.

1.2 Process Narrative

System will consist of an EM-30D EcoMAT® rotating belt filter used for solids removal and dewatering.

1.3 Process Diagram

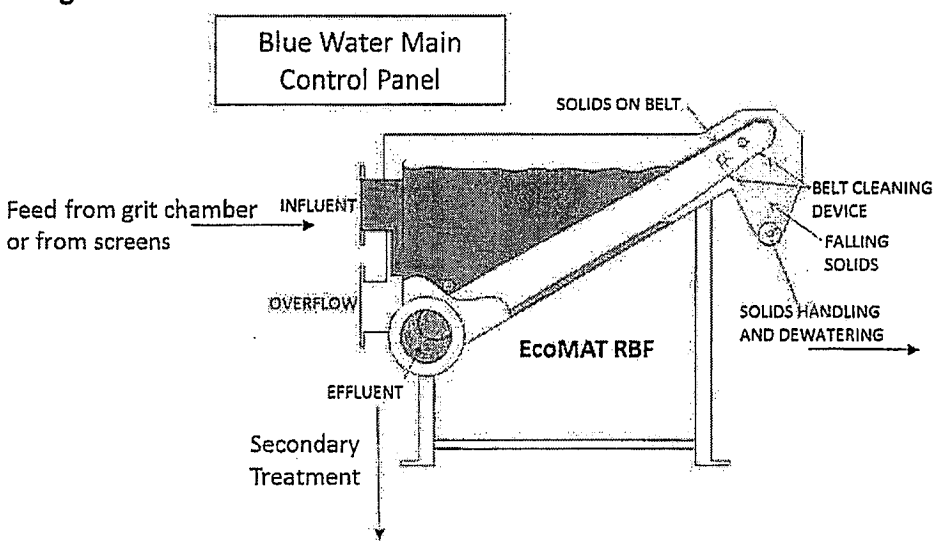

2016 – Blue Water Technologies Inc. - Confidential & Proprietary

1.4 Safety

Blue Water Technologies, Inc. promotes and maintains safe practices for equipment design and operation. All mechanical equipment and rotational features will be supplied with appropriate guards. Standard access covers feature safety interlocks. LOTO procedures shall be observed according to the more stringent of Blue Water's O&M manual or the Owners established Safety Policies. Blue Water's Commissioning and Training will include an overview of safe operational procedures in accordance with the O&M manual.

1.5 Equipment Warranty

Equipment will be warranted against manufacturer's defects in accordance with Blue Water's standard warranty for twelve (12) months from start-up or eighteen (18) months from date of shipment, whichever comes first, when operated at stated conditions and according to the instructions in Blue Water's operations and maintenance manual.

2 PRICING AND COMMERCIAL DELIVERY

2.1 Blue Water Pricing

Equipment and Service Described in Section 3 (Max: 6.8 MGD)	**$560,843.00**
Optional Reduction in Size to 1 EM-30D and 1 EM-15 (Max: 5.0 MGD)	**$489,856.00**

2.2 Notes and Considerations

2.2.1 All pricing is in U.S. Dollars.

2.2.2 Equipment is **F.O.B. Factory.**

2.2.3 The price does not include any import, sales, use, excise or similar taxes, fees, permits, etc.

2.3 Delivery

Submittal from accepted purchase order	4 to 6 weeks
Equipment from approved submittal and notice to proceed	14 to 18 weeks
Total:	18 to 24 weeks

2.4 Payment Schedule

10% with order
35% with approval of drawings and submittals and notice to proceed
40% with delivery of the equipment to the jobsite
10% with startup
5% retainage
All terms are net 30 days

2.5 Validity

This proposal is valid for a period of Sixty (60) days unless extended in writing by Blue Water.

2016 – Blue Water Technologies Inc. - Confidential & Proprietary

3 Eco MAT EQUIPMENT NARRATIVE AND SCOPE

3.1 Scope List

Model:	EM-30D	
Configuration:	Standard with Separate Overflow	
Component Materials:	SS 304	and BWT Composites
Total Number of units:	2	
Approximate Unit Size (L x W x H):	130 in X	139 in X 80 in
Height from Grade for Maintenance:	13 ft	Cartridge removal
Length from drive side for maintenance:	125 in	Auger removal
Influent, effluent, & overflow:	10 in	ANSI
Bottom cleanout flange:	4 in	ANSI
Dewatering filtrate:	3 in	ANSI
Equipment weight dry:	5640 lb	
Operating weight:	12100 lb	
Cartridge weight with drive motor:	700 lb	
Number of belt cleaning spray bars per unit:	1	
Maximum wash water required:	9 gpm	Intermittent Use
Belt drive gear motor (on VFD):	1.5 hp	
Auger drive gear motor (on VFD):	3 hp	
Belt cleaning booster pump:	2 hp	Intermittent Use
Hot Water Heater Rating:	10.0 kW	Intermittent Use
Max Amperage (all systems at 100%) :	64.0 amps	Basis: 480V, 3Ø, 60Hz
Equipment average power draw:	10.0 kW	

3.2 Documentation

3.2.1 Blue Water will supply one (1) electronic copy of the project submittal in English for review after receipt of a purchase order.

3.2.2 Blue Water will supply one (1) electronic copy of the Operations and Maintenance Manual with one (1) hard copy delivered with the equipment. All copies in English.

3.3 Commissioning and Startup

Commissioning and Startup includes up to a total of three (3) trips for start-up and training, including up to a total of nine (9) eight-hour days.

Additional time, if requested by the Owner, shall be invoiced at prevailing rates. Expenses associated with any additional field engineering will be invoiced at actual cost plus 10%.

2016 – Blue Water Technologies Inc. - Confidential & Proprietary

3.4 Electrical Control Panel and PLC

3.4.1 Standard Blue Water control panel includes a Koyo touchscreen HMI with an Allen Bradley PLC for control of all system subunits and ancillary components. Touchscreen is rated NEMA Type 4X for indoor use.

3.4.2 System control panel is powder coated steel meeting a NEMA Type 4 classification.

3.4.3 Control panel is integrated with components for internal humidity and environmental regulation.

3.5 Blue Water's Eco MAT™ RBF

Quantity	Description
1	System Control Panel per Section 2.1 for installation in **unclassified settings** (additional costs will be incurred for classified settings)
1	Eco MAT® RBF Enclosure
1	Cartridge with fully integrated cleaning system
1	Integrated screw press for dewatering
1	Sets of motors, gear boxes, and instrumentation
1	Total installed filter belts
1	Spare filter belts
1	Electric water heater ~20 gallons

Design Notes:

- Wash water can be operated intermittently and continuously depending on the need. Intermittent hot water is available to cut oils and grease lasting for programmable durations. Programmable frequency for the hot water ranges from once daily to multiple times per hour for high FOG.
- Water supply line to the filter system (with backflow protection, if required) will be provided by **Others.** Water scaling tendencies will be quantified using the Ryznar Stability Index. Ryznar Stability Index values will be between 6.0 and 7.0. Integral particle screening to guarantee < 0.5 NTU turbidity and < 30 micron entrained particle size.
- Dewatering is a process option. On systems with the dewatering option solids can be expected to range between 20 and 40% TS depending on solids quality and operating setpoints. Solids disposal provided by **Others.**

3.6 Special Considerations

3.6.1 There is an unknown quantity of FOG at this location.

4 SCOPE OF SUPPLY BY OTHERS

4.1.1 Preparation of structural engineering drawings for all concrete work. Concrete material and its placement.

4.1.2 Site preparation, unloading, placement and installation of equipment. Installation of all Blue

2016 – Blue Water Technologies Inc. - Confidential & Proprietary

Water supplied equipment.

4.1.3 Supply and installation of required plumbing to include drain, influent, effluent, reject piping, all associated valves, required pipe support, and appurtenances to and from the connection point on Blue Water supplied equipment.

4.1.4 Anchor bolts supplied by Contractor.

4.1.5 Buildings (if required) and building utilities and HVAC.

4.1.6 Supply and connection of electrical service to Blue Water supplied control panel. Supply, installation, and connection of interconnecting circuits between Blue Water supplied panels and auxiliary panels and/or instrumentation and/or motorized devices.

4.1.7 Supply and installation of interconnecting vent, drain, and airlines and their associated valves and appurtenances.

4.1.8 Reject disposal, handling and/or processing.

4.1.9 Ancillary tanks unless specified (chemical feed tanks, flow equalization tanks, etc.).

4.1.10 Weather protection including the supply and installation of insulation, heat tracing of any piping or tubing, etc. (if required).

4.1.11 Chemicals required for operation.

4.1.12 Filter influent flow signal (4-20 mA) to filter control panel.

5 TERMS AND CONDITIONS

I GENERAL: All references to Blue Water (or any derivative thereof) shall mean Blue Water Technologies, Inc. and all references to Buyer herein shall mean the customer named in a purchase order, quotation or proposal. All quotations from Blue Water shall be considered solicitations of offers. All purchase orders placed by Buyer shall be considered offers, which can only be accepted upon written notice thereof from Blue Water. Buyer shall either sign Blue Water's quotation, or in the alternative, issue a purchase order containing necessary information, such as site name, price schedule, type and quantity of product, requested delivery date and delivery instructions. Notwithstanding any terms or conditions that may be included in Buyer's purchase order form or other communications, Blue Water's acceptance is conditional upon Buyer's assent to the terms and conditions set forth herein. It is agreed that sales are made only on the terms and conditions herein and any other terms or conditions shall not become a part of the agreement unless expressly agreed to in writing by Blue Water. Blue Water's failure to object to any terms or conditions contained in Buyer's purchase order or other communication shall not be deemed to be acceptance of such terms or conditions. The terms and conditions set forth herein shall be deemed incorporated (as though set forth in full) into any agreement entered into between Blue Water and Buyer unless otherwise noted in writing. Blue Water reserves the right, without any increase in price, to modify the design and specifications of Blue Water products, provided that the modification does not adversely affect the original performance specifications as specified by Blue Water or as requested by Buyer. Shipments, deliveries and performance of work shall at all times be subject to the approval of Blue Water's Credit Department. Blue Water may at any time decline to make any shipment or delivery or perform any work except upon receipt of payment or security or upon terms and conditions satisfactory to Blue Water.

2016 – Blue Water Technologies Inc. - Confidential & Proprietary

II PRICES, TERMS OF PAYMENT & TAXES: (a) PRICES: Unless expressly stated to be firm for a definite period, offers are subject to change without notice, and in all cases are subject to withdrawal at any time before acknowledgment by Buyer. Under no condition will a quotation from Blue Water remain in effect for longer than sixty (60) days unless otherwise agreed to in writing by Blue Water. If a price is stated in the quotation, it is based upon shipment of the quantities and quality requested by Buyer and on the basis of Blue Water's internal delivery schedule at the time of preparation of said quotation. (b) TERMS OF PAYMENT: Unless otherwise stated in a quotation, payments against invoices shall be due and payable thirty (30) days from the dated of shipment, regardless of the date upon which Buyer receives the invoice from Blue Water. If in Blue Water's opinion, Buyer's financial condition does not justify continuation of production or shipment on the terms of payment specified, Blue Water may, upon written notice to Buyer, cancel or suspend any outstanding order or part thereof, unless Buyer shall promptly pay for all goods delivered or shall make advance payments to Blue Water as it, at its option, shall determine. If Buyer delays shipment for any reason, date of readiness for shipment shall be deemed to be the date of shipment for payment purposes. If Buyer delays manufacture for any reason, a payment shall be made based on purchase price and percentage of completion, with the balance payable in accordance with the terms as stated. If payments are not made in conformance with the terms stated herein, the contract price shall, without prejudice to Blue Water's right to immediate payment, be increased by 1 ½ % per month on the unpaid balance, not to exceed the maximum amount permitted by law. If at any time in Blue Water's judgment Buyer may be or may become unable or unwilling to meet the terms specified herein, Blue Water may require satisfactory assurance or full or partial payment as a condition to commencing, or continuing manufacture, or in advance of shipment. (c) TAXES: Except for the amount, if any, of tax stated in a Blue Water quotation, the prices set forth therein are exclusive of any amount for federal, state, local, excise, sales, use, property, or similar taxes or duties. Such prices also exclude permit, license, customs and similar fees levied upon shipment of Blue Water products.

III SHIPMENT: The anticipated shipment date set forth in the quotation is approximate and subject to change. Notwithstanding other limitations set forth by Blue Water, Blue Water shall not be liable for any delays in shipment which are caused by events beyond the control of Blue Water including, but not limited to, delays caused by inaccurate or incomplete data furnished by Buyer, changes or revisions in the work to be performed, tardy approval of shop drawings by Buyer, acts of Buyer or Buyer's agent, accidents, strikes, inability to obtain labor or materials, or delay in transportation. Blue Water shall have the right to extend the anticipated shipment date for up to ten (10) calendar days, for any reason, provided Blue Water shall give Buyer written notice of such delay at least seven (7) days prior to the scheduled shipping date. Equipment or parts will be crated for domestic truck shipment at Blue Water's expense, Blue Water assumes responsibility for loss of, or damage to the equipment until delivery to the Buyer, and the equipment shall thereafter be at the Buyer's sole risk. If a delay in delivery schedule is caused by the Buyer, the Buyer shall reimburse Blue Water upon demand by Blue Water for any costs incurred by Blue Water in connection with equipment storage, including steps taken to protect the products from the elements. Any delay in shipment requested or caused by Buyer or its agents will not affect the terms of payment as provided herein. Buyer shall be responsible for the payment of any additional cost of shipping occasioned by the delay.

2016 – Blue Water Technologies Inc. - Confidential & Proprietary

IV TITLE & RISK OF LOSS: Blue Water's prices are F.O.B. Factory unless otherwise explicitly noted in the quotation and are exclusive of taxes, shipping and insurance. Title to all goods and risk of loss, deterioration or damage shall pass to Buyer upon equipment delivery; except that a security interest in the products or any replacement shall remain in Blue Water's name, regardless of mode of attachment to realty or other property, until the full purchase price has been fully paid in cash. Buyer agrees to do all acts necessary to perfect and maintain said security interest, and to protect Blue Water's interest by adequately insuring the products against loss or damage from any external cause with Blue Water named as insured or co-insured. Any claim by Buyer against Blue Water for shortage or damage occurring prior to delivery must be made in writing within ten (10) calendar days after receipt of shipment and accompanied by an original transportation bill signed by the carrier noting that carrier received goods from Blue Water in the condition claimed. Blue Water shall have the right to ship all goods at one time or in portions, within the time for shipping provided in such order, unless specifically requested in writing by the Buyer that these shipments be made in total. Any shipments returned to Blue Water as a result of Buyer's unexcused delay or failure to accept delivery will require Buyer to pay all additional costs incurred by Blue Water. Additionally, once Buyer has been notified that its order is available for shipment, if Buyer requests that the products not be shipped until a later date, the products will be stored at the Buyer's risk and expense until permission to ship to the jobsite is given by Buyer.

V ERECTION: Unless otherwise agreed in writing, products are assembled, installed and/or erected by and at the full expense of Buyer.

VI CANCELLATION & BREACH: Buyer agrees that Blue Water products are specially manufactured goods that are not suitable for sale to others in the ordinary course of business. Therefore, purchase orders placed with Blue Water cannot be canceled without recourse, nor shipments of goods made up, or in process, be deferred beyond the original shipment dates specified, except with Blue Water's written consent and upon terms which shall indemnify Blue Water against all loss. In the event of cancellation or the substantial breach of the agreement between Buyer and Blue Water, including without limitation, failing to make payment when due, Buyer agrees that Blue Water will suffer serious and substantial damage which will be difficult, if not impossible, to measure, both at the time of entering the agreement and as of the time of such cancellation or breach. Therefore, the parties agree that upon such cancellation or breach, the Buyer shall pay to Blue Water the sums set forth below which Blue Water and Buyer do hereby agree shall constitute agreed and liquidated damages in such event:

a. If cancellation or breach shall occur after the acceptance of the purchase order but prior to mailing of general arrangement drawings by Blue Water to Buyer, liquidated damages shall be 10% of the selling price.

b. If cancellation or breach shall occur within thirty (30) days from the mailing of general arrangement drawings by Blue Water to Buyer, the liquidated damages shall be 30% of the selling price.

c. If the cancellation or breach occurs after thirty (30) days from the mailing of general arrangement drawings by Blue Water to Buyer, but prior to notification that the order is ready for shipment, the liquidated damages shall be the total of 30% of the selling price plus the expenses incurred, cost of material, and reasonable value of the work expended to fill the respective order by Blue Water's engineers and other employees, agents and representatives after the mailing of general arrangement drawings by Blue Water to Buyer. All sums will be

2016 – Blue Water Technologies Inc. - Confidential & Proprietary

determined at the sole reasonable discretion of Blue Water provided, however, that the total liquidated damages under this provision shall not exceed the total selling price.

d. If cancellation or breach shall occur after Blue Water has notified Buyer that the order is ready for shipment, then the liquidated damages shall be the total selling price.

VII DRAWINGS & SPECIFICATIONS: In the event that drawings are sent to Buyer for approval after an order is placed, the drawings must be returned marked "Approved" or "Approved As Noted" within twenty (20) working days after receipt unless otherwise noted. In the event that Buyer's written comments are not given within the twenty (20) day period, Blue Water shall deem the items approved.

VIII CORRECTIVE WORK & "BACK CHARGES": In no event shall any work be done, or services or material be purchased or expense otherwise incurred by the Buyer for the account of Blue Water until after full and complete particulars (including and estimate of material cost) have been submitted in writing and approved in writing by Blue Water. Blue Water must be given the opportunity to discuss and research alternative methods to lower the costs involved in such corrective work. Unless agreed-upon in writing by Blue Water, Blue Water will not be liable for labor costs, overhead, administrative costs, interest or any other consequential or indirect costs Buyer incurs. Returned items will not be accepted unless Blue Water has previously agreed to such return in writing and supplied written return-shipping instructions to Buyer.

IX SELECTION OF MATERIALS: Because all Blue Water products are specially manufactured products, the material make-up of many of Blue Water's products varies from project to project. The determination of the materials' suitability and adaptability (including without limitation, paints and/or coatings) to the specific needs of the Buyer is solely the Buyer's choice and responsibility.

X CONFIDENTIAL INFORMATION & IMPROVEMENTS: The design, construction, application and operation of the Blue Water's products and services embody proprietary and confidential information; therefore, Buyer will maintain this information in strict confidence, will not disclose it to others and will only use this information in connection with the use of the products or to facilitate the provision of services sold by Blue Water. Buyer will not copy or reproduce any written or printed materials or drawings furnished to Buyer by Blue Water. Buyer agrees to immediately return all confidential material to Blue Water if requested in writing by Blue Water. Buyer will not copy the products or make any design drawings of the products and will not permit others to copy or make any design drawings of the products. Blue Water shall have a royalty-free license to make, use and sell, any changes or improvements in the products invented or suggested by Buyer or its employees. Buyer acknowledges that a remedy at law for any breach or attempted breach of this Section will result in a harm to Blue Water for which monetary damages alone will not be adequate. Buyer covenants and agrees that neither it nor any of its affiliates will oppose any demand for specific performance and injunctive and other equitable relief in case of any such breach or attempted breach. Notwithstanding anything to the contrary herein, Blue Water may seek enforcement of any breach of this Section without the necessity of complying with the provisions regarding resolution of disputes herein.

2016 – Blue Water Technologies Inc. - Confidential & Proprietary

XI FIELD SERVICE: Field Service included in the quotation will only be scheduled upon written request and may be subject to credit approval. Should the Buyer have outstanding balances due Blue Water, no startup/field service will be scheduled until such payments are received by Blue Water. The Buyer assumes all responsibility for the readiness of the system when it requests startup service. Should Blue Water's Field Service Engineer arrive at the jobsite and determine that the system cannot be started up within a reasonable time, Blue Water shall have the option to bring the Field Service Engineer home and bill the Buyer for time, travel and living expenses. Additional field service is available from Blue Water at the prevailing per-diem rate at the time of the request for service plus all travel and living expenses, portal-to-portal. A purchase order or change order will be required prior to scheduling this additional service.

XII LIMITATION OF LIABILITY: Unless expressly agreed to in writing by Blue Water, all damages not direct and actual in nature, including without limitation, consequential, incidental, exemplary and punitive damages, shall be expressly prohibited damages. Such prohibited damages include, but are not limited to, lost rent or revenue; rental payments; costs (increased or not) of administration or supervision; costs or delays suffered by others unable to commence work or provide services as previously scheduled for which a party to this contract may be liable; increased costs of borrowing funds devoted to the project (including interest); delays in selling all or part of the project upon completion; damages caused by reason of Force Majeure or acts of God (with the broadest statutory or court of law definition possible); termination of agreements to lease or buy all or part of the project, whether or not suffered before completion of services or work; forfeited bonds, deposits, or other monetary costs or penalties due to delay of the project; interest for any reason assessed to Buyer; increased taxes (federal, state, local, or international) due to delay or recharacterization of the project; lost tax credits or deductions due to delay; impairment of security; attorney and other legal fees for any reason assessed to Buyer, loss of use of the Equipment or any associated Equipment, costs of substitute Equipment, facilities or services, down time costs, claims of customers of Buyer for such other damages; or any other indirect loss arising from the conduct of the parties. Blue Water only agrees to responsibility for damages from proven negligent and willful acts of its direct employees only.

XIII APPLICABLE LAWS & GOVERNING LAW: To the best of Blue Water's knowledge, Blue Water products comply with most laws, regulations and industrial practices; however, Blue Water does not accept responsibility for any state, city or other local law not specifically brought to Blue Water's attention. For OSHA compliance, (1) Blue Water is only liable for those OSHA standards, which are in effect as of the date of the quotation, and to the extent they are applicable to the performance by Blue Water. (2) Blue Water is only responsible for the physical characteristics of the product(s) and not for the circumstances of the use of the product(s). (3) Blue Water's liability through any noncompliance to OSHA shall be limited to the cost of modifying the product(s) or replacing the non-complying product(s) or component(s) after receipt of prompt written notice of noncompliance. The rights and obligations of Buyer and Blue Water shall be governed by and interpreted in accordance with the substantive laws of the state of Idaho including the uniform commercial code of Idaho, excluding conflicts of law and choice of law principles.

2016 – Blue Water Technologies Inc. - Confidential & Proprietary

XIV DISPUTE RESOLUTION: Any issue, claim or dispute ("Action") that may arise out of or in connection with the project referenced in the quotation and which Buyer and Blue Water are not able to resolve by good faith negotiations, shall be submitted to mediation. Both parties shall choose a mediator and said mediator will decide the forum most convenient for both parties. Both parties agree to reasonably attempt to resolve all Actions via this medium. If mediation shall fail, the Action shall be submitted to binding arbitration administered by the American Arbitration Association under its Construction Industry Arbitration Rules and Mediation Procedures (including Procedures for Large, Complex Construction Disputes), and judgment on the award rendered by the arbitrator(s) may be entered in a court having jurisdiction thereof. The parties agree to use mediation then arbitration to resolve such Action in lieu of litigation. In the event that an Action is brought, the prevailing party shall be entitled to be reimbursed for, and/or have judgment entered with respect to, all of its costs and expenses, including reasonable attorney's fees' and legal expenses. The governing jurisdiction will be mutually agreed upon by both parties.

XV PATENTS: Blue Water shall indemnify Buyer against any judgment for damages and costs which may be rendered against Buyer in a suit brought on account of the alleged infringement of any United States patent by any product supplied by Blue Water, unless (a) the alleged infringement occurs as a result of any alteration or modification to the product or the use of the product in combination with the products or services of any party other than Blue Water, or (b) the product was made in accordance with materials, designs or specifications furnished or designated by Buyer, in which case Buyer shall indemnify Blue Water against any judgment for damages and costs which may be rendered against Blue Water in any suit brought on account of the alleged infringement of any United States patent by such product or by such materials, designs or specifications; provided that prompt written notice be given to the party from whom indemnity is sought of the bringing of the suit and an opportunity be given to such party to settle or defend it as that party may see fit and that every reasonable assistance in settling or defending it shall be rendered. Blue Water shall in no event be liable to Buyer for special, indirect, incidental or consequential damages arising out of allegation of patent infringement.

XVI MECHANICAL WARRANTY: All Equipment will be warranted against manufacturer's defects in accordance with Blue Water's warranty for eighteen (18) months from equipment delivery or twelve (12) months from the date of startup, whichever comes first, when operated at stated conditions and according to the instructions in Blue Water's operations and maintenance manual. In the event that defects develop during the Warranty Period, under normal and proper use, Blue Water is to be notified promptly in writing, and upon receipt of its written consent, the products are to be returned promptly to Blue Water, F.O.B. Blue Water's factory. If Blue Water's inspection indicates defective material or workmanship, the parts will, at Blue Water's option, either be repaired or replaced without charge. In the case of components purchased by Blue Water and incorporated in the Equipment, Blue Water's Mechanical Warranty is limited to the component manufacturer's warranty. In addition to any other limitation or disclaimer with respect to this Mechanical Warranty, Blue Water shall have no liability with respect to any of the following: failure of the products, or damages to them, due to Buyer's negligence or willful misconduct, abuse or improper storage, installation, application or maintenance (as specified in Blue Water's O&M manuals); any products that have been altered or repaired in any way without Blue Water's prior written consent; any products damaged while in transit or otherwise by accident;

2016 – Blue Water Technologies Inc. - Confidential & Proprietary

decomposition of products by chemical action, erosion or corrosion or wear of products caused by abrasive materials. Service calls during the Warranty Period, when requested by Buyer and where no evidence of defective material or workmanship is found, will be at Buyer's expense. Blue Water shall not be held liable for any further cost, expense, or labor to replace Equipment or replaceable parts. All indirect damages are hereby limited pursuant to the Limitation of Liability clause herein and shall continue for the duration of the Warranty Period.

THE FOREGOING MECHANICAL WARRANTY IS EXCLUSIVE AND IN LIEU OF ALL OTHER GUARANTEES AND WARRANTIES OF FITNESS FOR A PARTICULAR PURPOSE AND MERCHANTABILITY, WHETHER WRITTEN, ORAL OR STATUTORY, WHICH ARE EXCLUDED TO THE FULLEST EXTENT PERMISSIBLE BY LAW. ALL WARRANTIES AND OBLIGATIONS OF BLUE WATER SHALL TERMINATE IF BUYER FAILS TO PERFORM ITS OBLIGATIONS UNDER THIS OR ANY OTHER AGREEMENT BETWEEN THE PARTIES OR IF BUYER FAILS TO PAY ANY CHARGES DUE BLUE WATER.

XVII MISCELLANEOUS: The parties agree that the foregoing constitutes the entire agreement between Buyer and Blue Water and that there are no other agreements, terms or conditions, expressed or implied, unless otherwise agreed to in writing. This document may not be modified or superseded other than by an instrument in writing signed by both Buyer and Blue Water. This document shall be binding upon and inure to the benefit of Buyer and Blue Water and their heirs, assignees, legal representatives and the project Owner for the project referenced in the quotation. The invalidity or non-enforceability of any particular provision of this document shall not affect the other provisions hereof, and this document shall be construed in all respects as if such invalid or unenforceable provisions were omitted.

2016 – Blue Water Technologies Inc. - Confidential & Proprietary

REVISIONS			
REV.	DESCRIPTION	DATE	ECO
01	Released to Sales	7/24/2013	

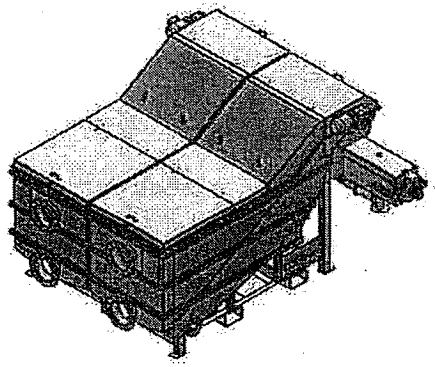

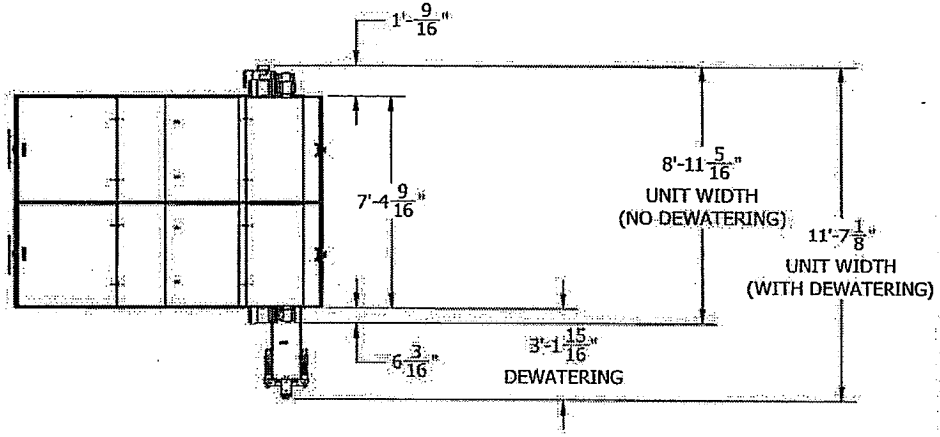

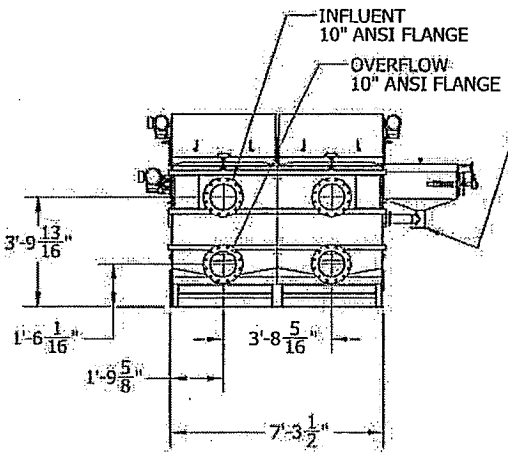

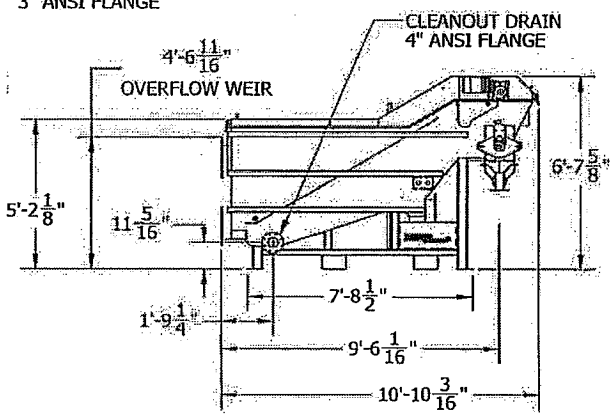

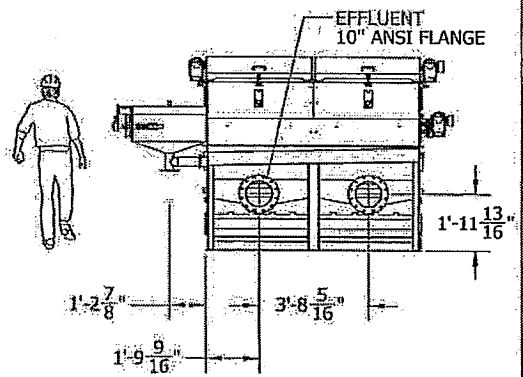

NOTES:

1. THIS DRAWING FOR GENERAL ARRANGEMENT ONLY
2. UNIT WEIGHTS:
   - DRY WEIGHT = 5,640 LBS
   - OPERATING WEIGHT = 12,100

DWG SIZE: B
SCALE: 1:48
PAGE: 1 of 2

PROJECT: Eco MAT
DESCRIPTION: General Arrangement Drawing Rotating Belt Filter EM-30D
REV: 01
DRAWING NUMBER: EM-30D GA

UNLESS OTHERWISE SPECIFIED DIMENSIONS ARE IN INCHES
TOLERANCES:
FRACTIONAL ±1/16"
ONE PLACE DECIMAL ±.125
TWO PLACE DECIMAL ±.010
THREE PLACE DECIMAL ±.005
ANGULAR ±2.0°
THIRD ANGLE PROJECTION

COMPANY CONFIDENTIAL

BLUE WATER TECHNOLOGIES
LEWIS & CLARK DRIVE
HAYDEN, ID 83835

		DATE
DRAWN BY:	Klemings	7/18/13
CHECKED BY:	BMessersmidt	7/18/13
APPROVED BY:	-	-
ISSUED BY:	-	-

REVISIONS			
REV.	DESCRIPTION	DATE	ECO

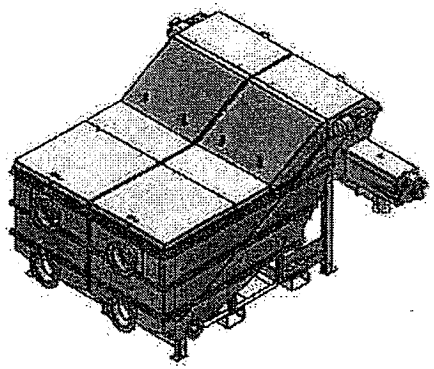

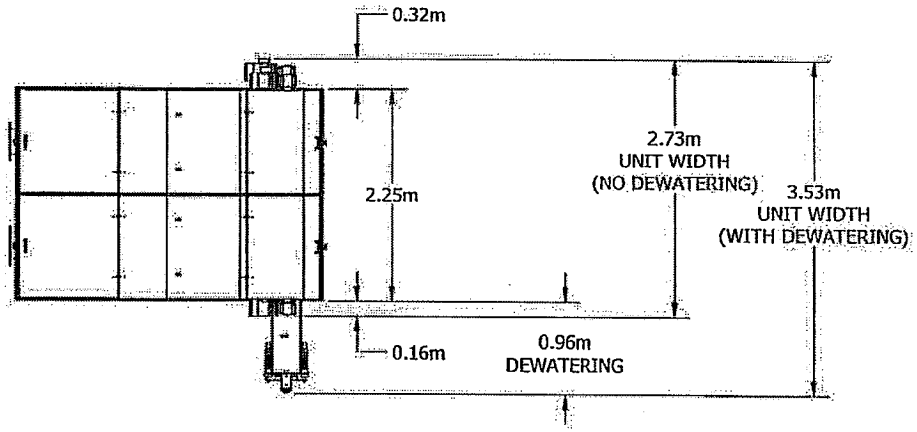

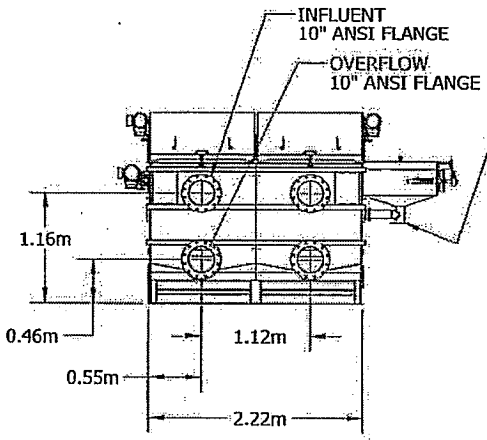

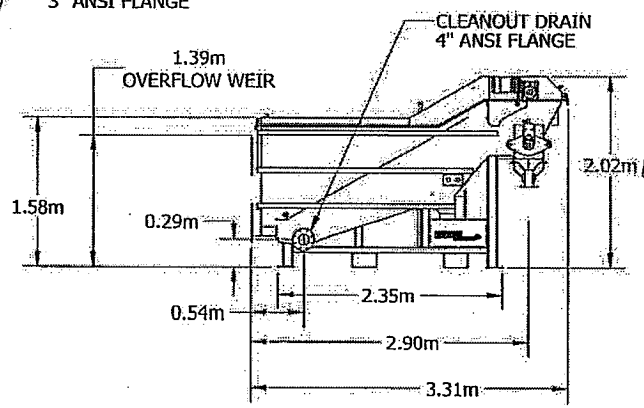

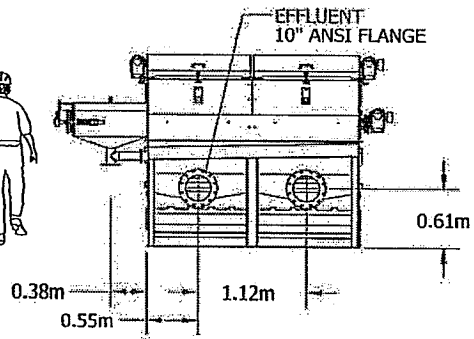

NOTES:

1. THIS DRAWING FOR GENERAL ARRANGEMENT ONLY
2. UNIT WEIGHTS:
   - DRY WEIGHT = 2,560 kg
   - OPERATING WEIGHT =5490 kg

DWG SIZE: B
SCALE: 1:48
PAGE: 2 OF 2

PROJECT: Eco-MAT
DESCRIPTION: General Arrangement Drawing Rotating Belt Filter EM-30D
REV: 01
DRAWING NUMBER: EM-30D GA

UNLESS OTHERWISE SPECIFIED DIMENSIONS ARE IN INCHES
TOLERANCES
ONE PLACE DECIMAL ±0.1
TWO PLACE DECIMAL ±0.01
THREE PLACE DECIMAL ±0.005
ANGULAR: ±0.5°
THIRD ANGLE PROJECTION

COMPANY CONFIDENTIAL

BLUE WATER TECHNOLOGIES
LONGMAN AVENUE NO.
HAYWARD, CA 94544

DRAWN BY:	Klemmings	7/18/13
CHECKED BY:	BWeissenschmidt	7/18/13
ENGINEERING:		
PROJ. ENGINEER:		
MANUF.:		

DATE:

REVISIONS			
REV.	DESCRIPTION	DATE	ECO
01	Released to Sales	7/24/2013	

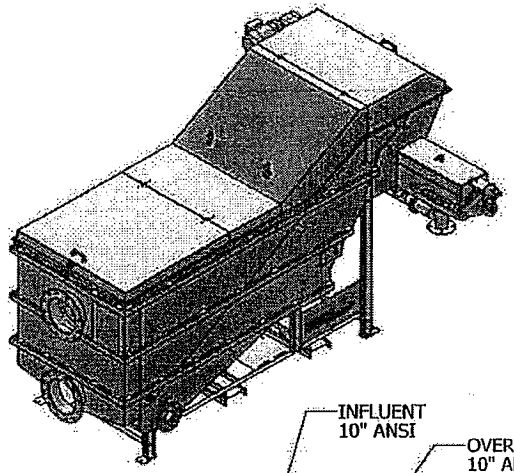

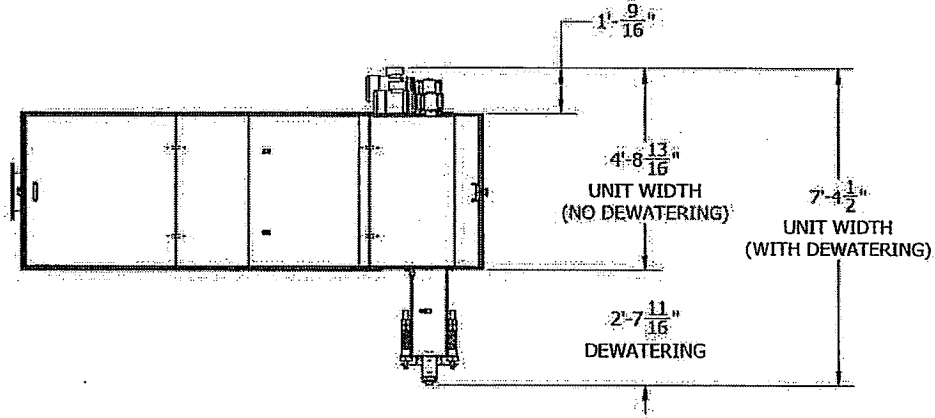

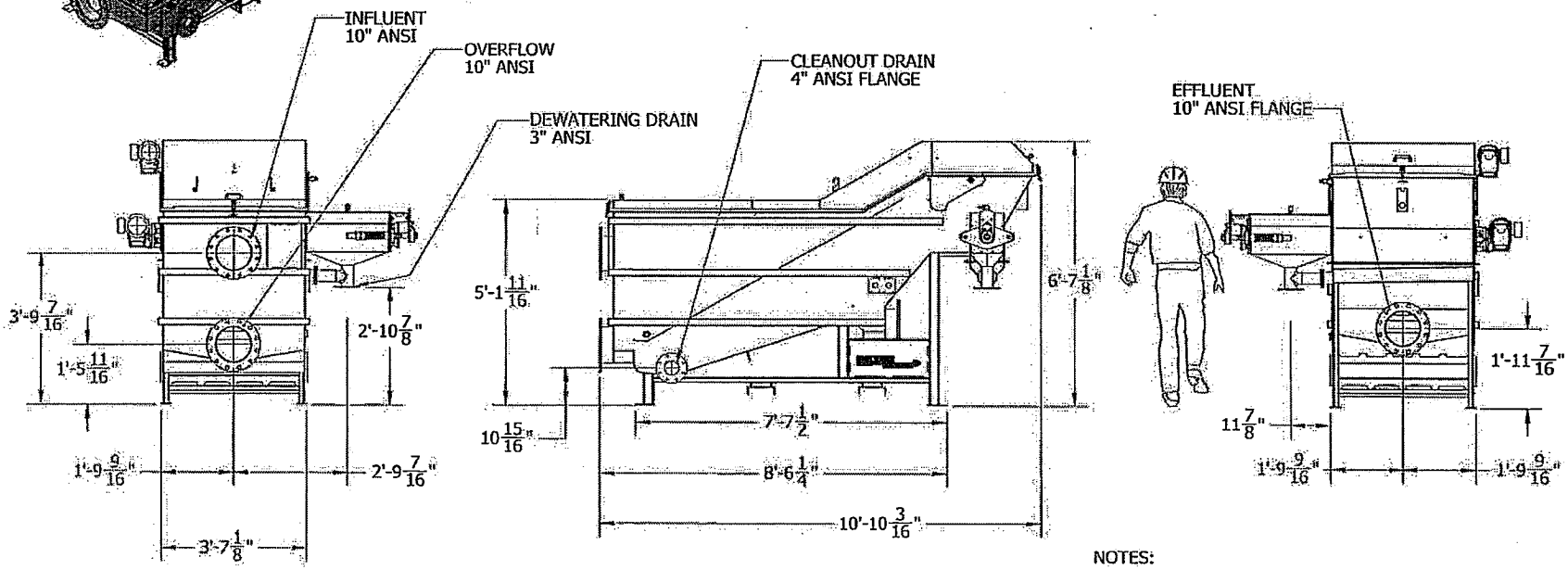

NOTES:

1. THIS DRAWING IS FOR GENERAL ARRANGEMENT ONLY
2. UNIT WEIGHT:
   - DRY WEIGHT = 2,900 LBS
   - OPERATING WEIGHT = 6,140 LBS

BLUE WATER TECHNOLOGIES
LOGAN IN, APPLEGATE AVE. HANGER, ID 83351

		DATE
DRAWN BY:	KJennings	7/19/13
CHECKED BY:	BMesserschmidt	7/19/13
ENGINEERING APPROVAL:	-	-
PROJECT APPROVAL:	-	-

COMPANY CONFIDENTIAL

UNLESS OTHERWISE SPECIFIED DIMENSIONS ARE IN INCHES
TOLERANCES:
ONE PLACE DECIMAL ±.1
TWO PLACE DECIMAL ±.01
THREE PLACE DECIMAL ±.005
ANGULAR: ±2.0°
THIRD ANGLE PROJECTION

PROJECT: Eco MAT
DESCRIPTION: General Arrangment Drawing Rotating Belt Filter EM-15
DRAWING NUMBER:
REV: 01
DWG SIZE: B
SCALE: 1:32
PAGE: 1 OF 2

REV.	REVISIONS DESCRIPTION	DATE	ECO

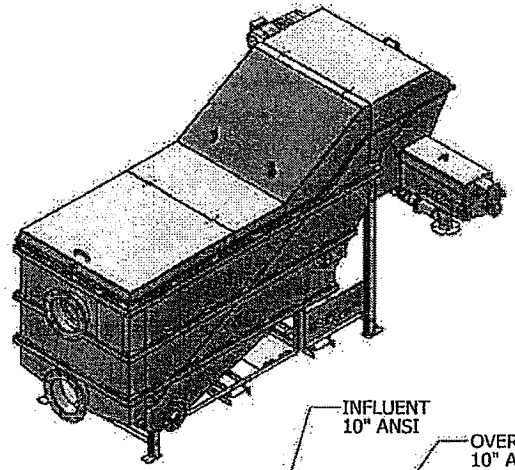

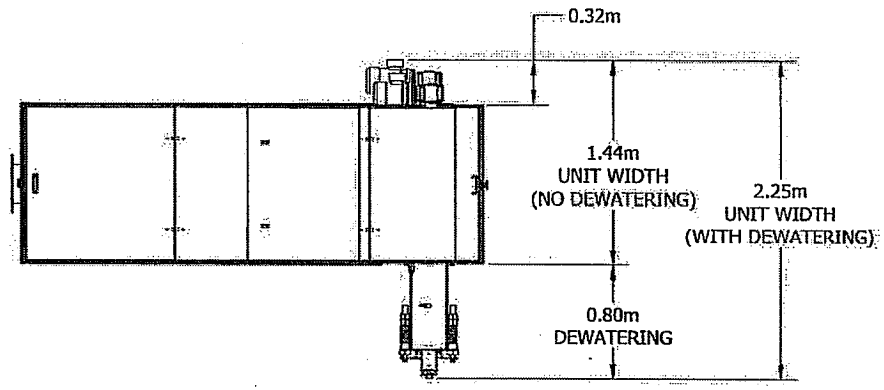

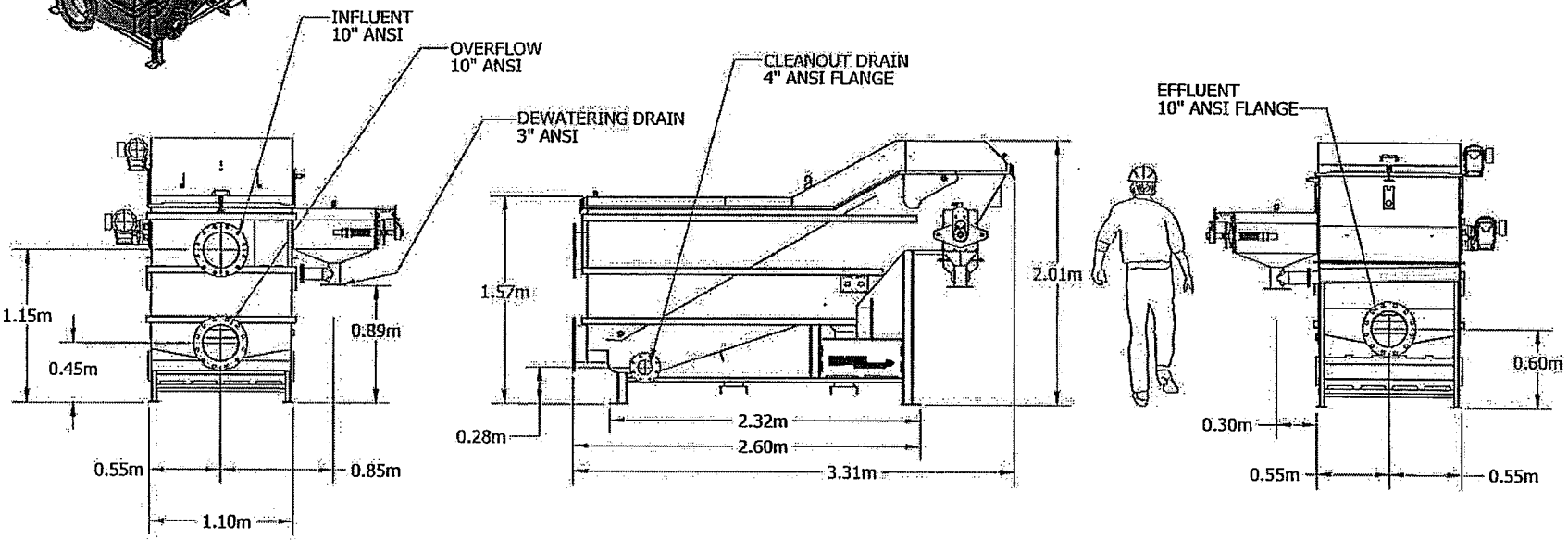

NOTES:

1. THIS DRAWING IS FOR GENERAL ARRANGEMENT ONLY
2. UNIT WEIGHT:
   - DRY WEIGHT = 1,320 kg
   - OPERATING WEIGHT = 2,790 kg

DWG SIZE: B
SCALE: 1:32
PAGE: 2 of 2

PROJECT: Eco MAT
DESCRIPTION: General Arrangment Drawing Rotating Belt Filter EM-15
REV: 01
DRAWING NUMBER:

UNLESS OTHERWISE SPECIFIED: DIMENSIONS ARE IN INCHES
TOLERANCES: FRACTIONAL ±1/64; DECIMAL ±.005; ANGULAR ±2.0°
THIRD ANGLE PROJECTION

COMPANY CONFIDENTIAL

BLUE WATER TECHNOLOGIES
ZONED IN ACCIDENT INC. HAYDEN, ID 83835

DRAWN BY:	KJennings	7/19/13	
CHECKED BY:	BHessenschmidt	7/19/13	
ENGINEERING:	-	-	
QUALITY:	-	-	
MFG APPROVAL:	-	-	
		NAME	DATE

REVISIONS			
REV.	DESCRIPTION	DATE	ECO
01	Released to Sales	7/10/2015	

NOTES:

1. THIS DRAWING IS FOR GENERAL ARRANGEMENT ONLY.
2. ALL DESIGNS TO BE VERIFIED BY BLUE WATER TECHNOLOGIES ENGINEERING.
3. BUILDING DIMENSIONS MAY VARY.
4. PIPING CONFIGURATION MAY VARY.
5. PLUMBING TO AND FROM FILTERS BY OTHERS.
6. STANDARD CONTROL PANEL AND UNIT ARE NOT RATED FOR CLASSIFIED AREAS.

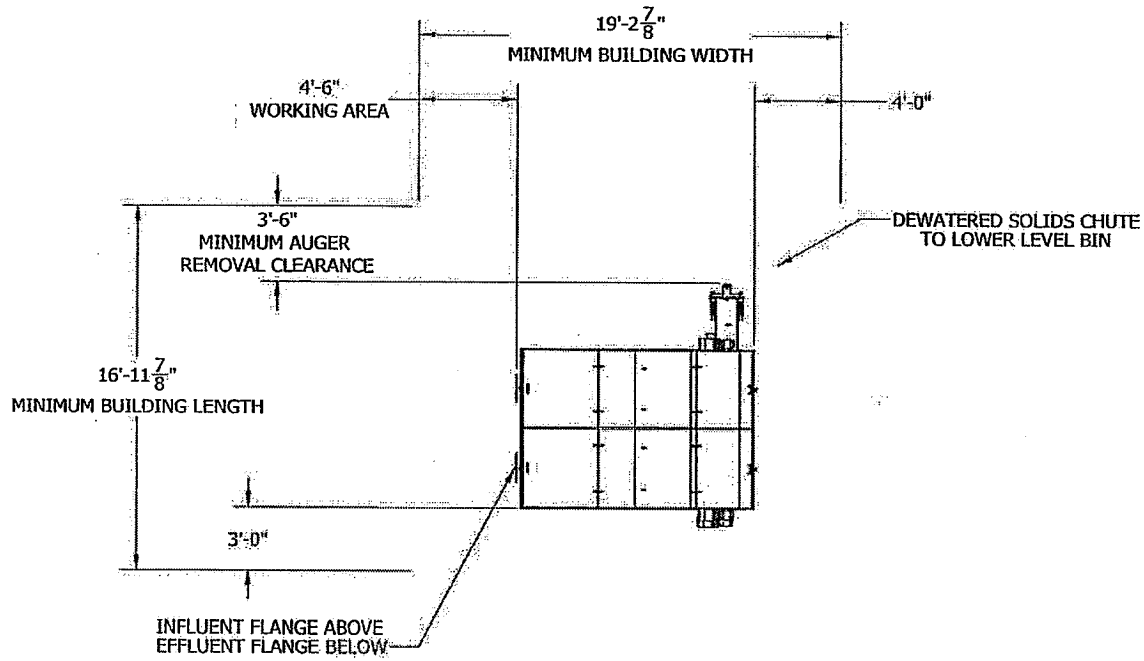

EM-30D: 1A

BLUE WATER TECHNOLOGIES

	NAME	DATE
DRAWN BY:	SScott	7/10/15
CHECKED BY:	KMemings	7/10/15
ENGINEERING APPROVAL:	JJohnson	7/10/15
ISSUED APPROVAL:	Johnson	7/10/15

COMPANY CONFIDENTIAL

UNLESS OTHERWISE SPECIFIED: DIMENSIONS ARE IN INCHES. TOLERANCES: FRACTIONAL ±1/32, ONE PLACE DECIMAL ±.125, TWO PLACE DECIMAL ±.030, THREE PLACE DECIMAL ±.010, ANGULAR ±2.0°. THIRD ANGLE PROJECTION

PROJECT: Eco MAT Sales

DESCRIPTION: General Arrangement Drawing, EM-30D Clearance

DRAWING NUMBER: EM-30D Clearance

REV: 01

DWG SIZE: B

SCALE: 1:64

PAGE: 1 OF 4

NOTES:

1. THIS DRAWING IS FOR GENERAL ARRANGEMENT ONLY.
2. ALL DESIGNS TO BE VERIFIED BY BLUE WATER TECHNOLOGIES ENGINEERING.
3. BUILDING DIMENSIONS MAY VARY.
4. PIPING CONFIGURATION MAY VARY.
5. PLUMBING TO AND FROM FILTERS BY OTHERS.
6. STANDARD CONTROL PANEL AND UNIT ARE NOT RATED FOR CLASSIFIED AREAS.

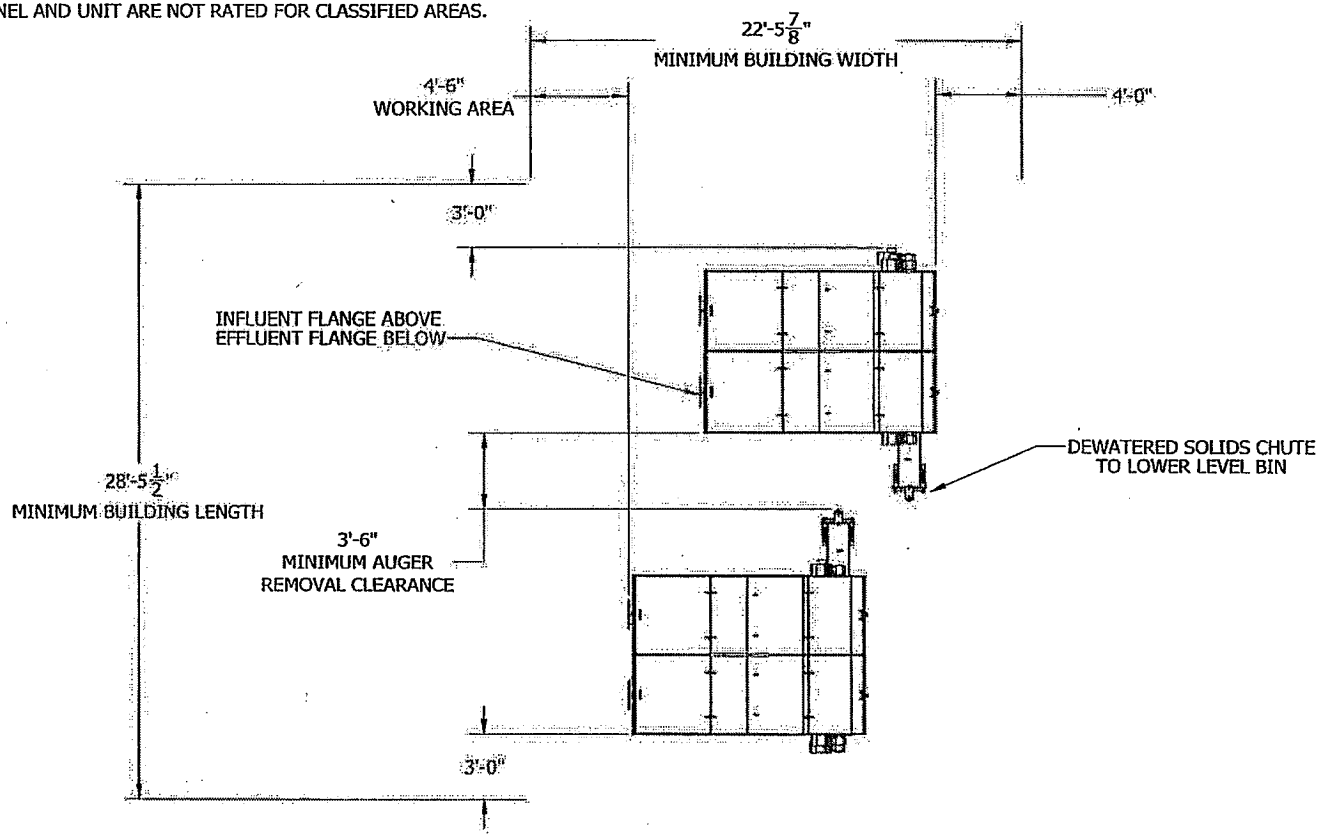

EM-30D: 2A

DRAWN BY: SScott	7/10/15	
CHECKED BY: KJennings	7/10/15	
ENGINEERING: JJohnson	7/10/15	
ISSUED: JJohnson	7/10/15	
APPROVED:	DATE:	

BLUE WATER TECHNOLOGIES
3549 N. ALHURST RD. SPOKANE, ID 83815

COMPANY CONFIDENTIAL

UNLESS OTHERWISE SPECIFIED
DIMENSIONS ARE IN INCHES
TOLERANCES:
FRACTIONAL ±1/32"
ONE PLACE DECIMAL ±.12
TWO PLACE DECIMAL ±.03
THREE PLACE DECIMAL ±.005
ANGULAR ±1.0°
THIRD ANGLE PROJECTION

PROJECT: Eco MAT Sales
DESCRIPTION: General Arrangement Drawing, EM-30D Clearance
DRAWING NUMBER: EM-30D Clearance
REV: 01
DWG SIZE: B
SCALE: 1:64
PAGE: 2 OF 4

NOTES:

1. THIS DRAWING IS FOR GENERAL ARRANGEMENT ONLY.
2. ALL DESIGNS TO BE VERIFIED BY BLUE WATER TECHNOLOGIES ENGINEERING.
3. BUILDING DIMENSIONS MAY VARY.
4. PIPING CONFIGURATION MAY VARY.
5. PLUMBING TO AND FROM FILTERS BY OTHERS.
6. STANDARD CONTROL PANEL AND UNIT ARE NOT RATED FOR CLASSIFIED AREAS.

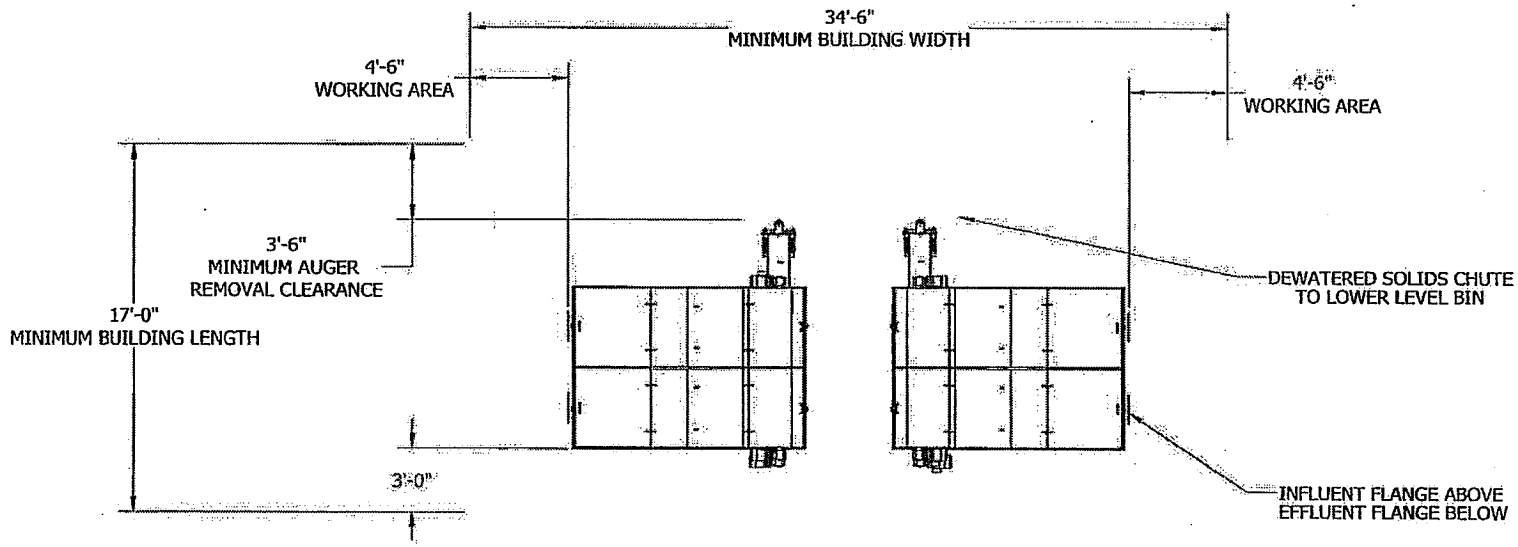

EM-30D: 2B

BLUE WATER TECHNOLOGIES
10169 N. 53rd STREET RD.
MILWAUKEE, WI 53223

DRAWN BY:	SScott	7/10/15
CHECKED BY:	KJennings	7/10/15
REVISED BY:	JJohnson	7/10/15
ENGINEERING APPROVAL:	JJohnson	7/10/15
	NAME	DATE

COMPANY CONFIDENTIAL

UNLESS OTHERWISE SPECIFIED
DIMENSIONS ARE IN INCHES
TOLERANCES
ONE PLACE DECIMAL ±.1
TWO PLACE DECIMAL ±.03
THREE PLACE DECIMAL ±.010
ANGULAR ±1°
THIRD ANGLE PROJECTION

PROJECT: Eco MAT Sales
DESCRIPTION: General Arrangement Drawing, EM-30D Clearance
DRAWING NUMBER: EM-30D Clearance
REV: 01
DWG SIZE: B
SCALE: 1:64
PAGE: 3 of 4

NOTES:

1. THIS DRAWING IS FOR GENERAL ARRANGEMENT ONLY.
2. ALL DESIGNS TO BE VERIFIED BY BLUE WATER TECHNOLOGIES ENGINEERING.
3. BUILDING DIMENSIONS MAY VARY.
4. PIPING CONFIGURATION MAY VARY.
5. PLUMBING TO AND FROM FILTERS BY OTHERS.
6. STANDARD CONTROL PANEL AND UNIT ARE NOT RATED FOR CLASSIFIED AREAS.

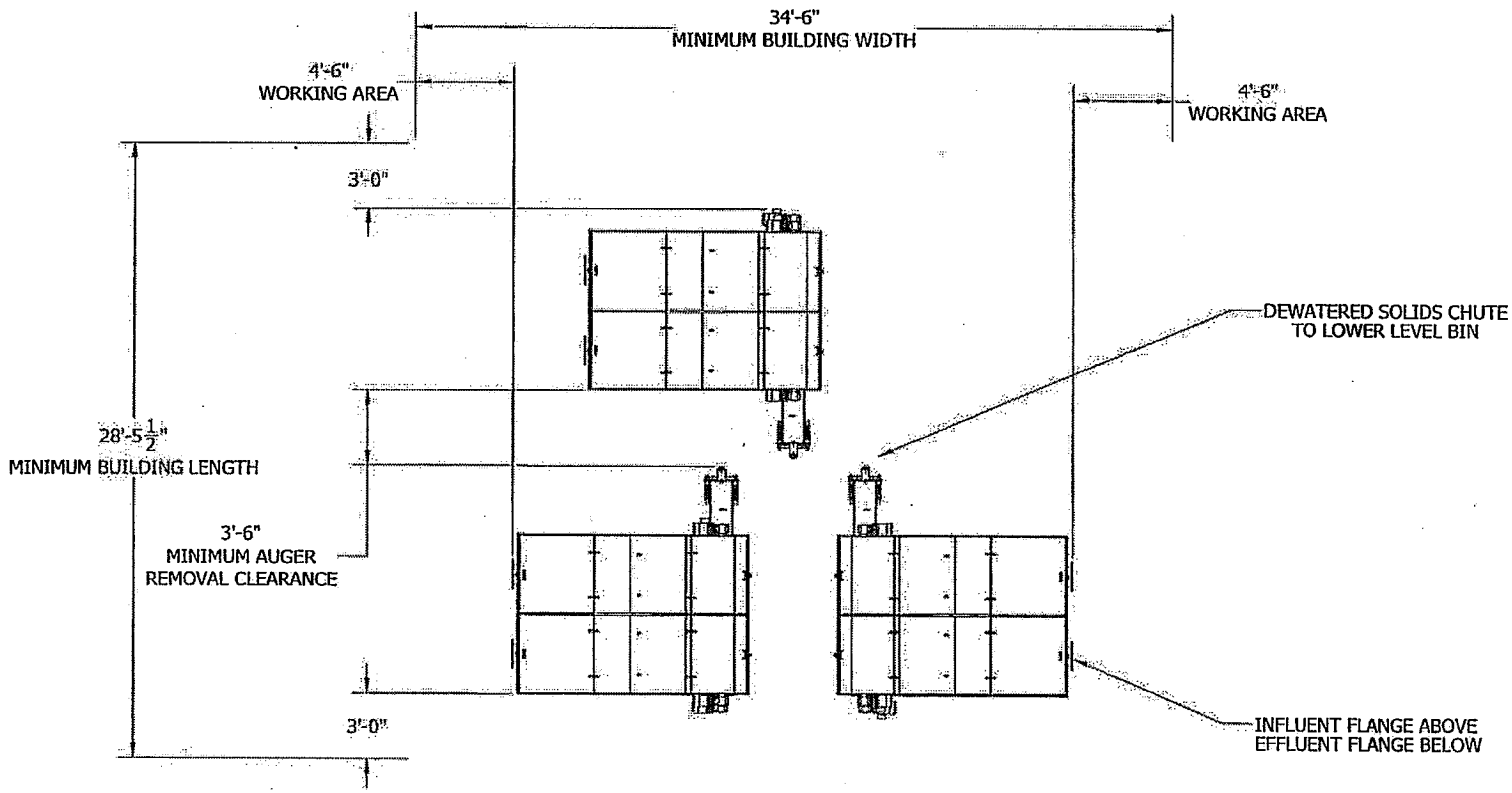

EM-30D: 3A

BLUE WATER TECHNOLOGIES

DRAWN BY:	SScott	7/10/15
CHECKED BY:	KJennings	7/10/15
ENGINEERING:	JJohnson	7/10/15
APPROVAL:	JJohnson	7/10/15

COMPANY CONFIDENTIAL

PROJECT: Eco MAT Sales

DESCRIPTION: General Arrangement Drawing, EM-30D Clearance

DRAWING NUMBER: EM-30D Clearance

REV: 01

DWG SIZE: B

SCALE: 1:64

PAGE: 4 of 4

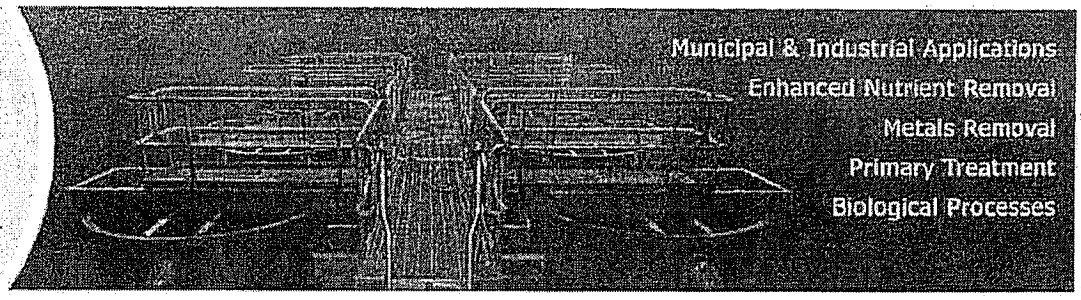

BLUE WATER TECHNOLOGIES

BLUE WATER TECHNOLOGIES

ADVANCED PRIMARY TREATMENT

Eco MAT® Rotating Belt Filter

BLUE WATER'S Eco MAT

Blue Water Technologies, Inc. is the industry leader in delivering wastewater solutions in both municipal and industrial applications. Blue Water is committed to developing processes to satisfy the challenging needs of customers around the world. As an integral piece to wastewater treatment processes Blue Water provides the most advanced primary treatment and solids recovery option available, Blue Water's Eco MAT™ rotating belt filter (RBF).

Blue Water's Eco MAT™ RBF is the result of decades of process improvement and Blue Water's design enhancements from years of experience designing plants, delivering equipment, and performing aftermarket service. Blue Water integrates proprietary control systems and ancillary equipment designed to complement the Eco MAT RBF, providing a solution that saves our customer's time, space and money.

Industrial screening applications are equally appropriate for RBF treatment. The Eco MAT is being used in solids mitigation systems overcoming a wide range of challenges in industrial facilities.

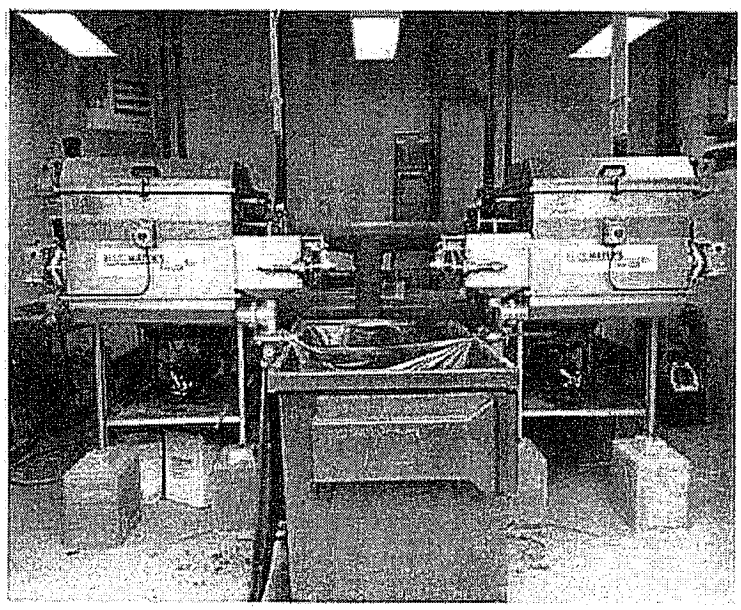

Blue Water's Eco MAT™ installed in Valparaiso, IN.

Applications

Blue Water's Eco MAT™ Rotating Belt Filter can be effectively used for:

- Primary Wastewater Treatment
- Grit removal
- Membrane Pretreatment

Installations:

Squire Green WWTP, NY
Centra-flo® - 0.1 MGD

- Enhanced Nitrification
- Secondary System Augmentation
- Sludge & Scum Thickening
- Agriculture
- Meat Processing
- Pulp and Paper Industry
- Dairy Processing
- Aquaculture
- Tanneries
- Textiles

Blue Water's Eco MAT™ RBF Advantage:

Superior nitrification and BNR
30-80% TSS and 20-40% BOD reduction
Fully automated, self-cleaning
Patent-pending cleaning system
1/10 the footprint of conventional clarification
1/5 the life-cycle cost of conventional clarification
Integrated dewatering options
20-40% solids dewatered in screenings

Engineers around the world have found the Eco MAT RBF to be an efficient and economical solution to a variety of wastewater challenges due to its small footprint and its flexibility to be arranged in multiple configurations. Engineers have maximized the use of existing infrastructure while expanding plant capacities by installing Blue Water's Eco MAT™ RBF and thus reallocating the capacity of conventional clarifiers to the secondary system. In new and existing municipal wastewater plants the Eco MAT RBF replaces conventional primary clarification. These filters can be integrated to expand primary clarification, relieve solids and BOD loading to the secondary system, enhance nitrification, or provide treatment for combined sewer overflow (CSO).

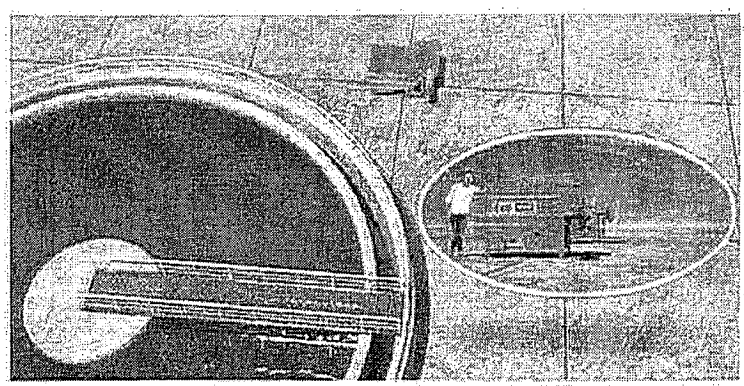

RBF Primary Treatment is Footprint Friendly

~$561 K
(2) EM 30

(1) EM30 ~$490 K
(1) EM 15

Blue Water's Eco MAT™ (RBF) Capacities & Dimensions (US Standard)

Model	Capacity (gpm)	Capacity (mgd)	Length (in)	Width (in)	Width & Dewatering (in)	Height (in)	Water Depth (in)	Belt Mesh Width (in)
EM-1	70	0.10	49	36	36	34	12	8
EM-3	350	0.50	63	42	62	54	16	15
EM-7	550	0.80	75	48	67	61	24	22
EM-10	700	1.0	95	58	89	72	24	30
EM-15	1200	1.7	130	58	89	87	35	30
EM-30S	2400	3.4	130	87	125	87	35	60
EM-30D	2400	3.4	130	108	140	87	35	30 (2x)
EM-30C	2400	3.4	120	83	N/Ap	82	35	60

*Hydraulic capacity for RBFs is dependent on solids content and desired removal

performance. These loadings reflect 50% TSS removal in typical municipal wastewaters.

Toggle Standard/Metric Units

How It Works

Blue Water's Eco MAT™ RBF removes solids through the use of a continuous-loop fine mesh belt screen. As the screen moves it acts like a conveyor and carries solids out of the incoming wastewater. A patent-pending cleaning system discharges the solids from the belt screen and deposits them into the screenings hopper, virtually eliminating any solids carry-over. Periodic hot-water flushes further clean the belt screen by removing oil and grease that may accumulate over time. An optional screw press dewaters the collected screenings between 20-40% dry solids while screened wastewater continuously passes through the unit.

Blue Water's Eco MAT™ RBF removes between 30-80% TSS and 20-40% BOD from wastewater and the unique design allows for removal of organic and inorganic solids as fine as 15-30 micron. The Eco MAT RBF units are compact, completely enclosed low-maintenance solutions for wastewater. The integral odor containment of the design allows for indoor installation in a clean environment, and the Eco MAT RBF filter was designed for food-grade compatible maintenance in an FDA regulated environment. Blue Water offers additional equipment for conveyance, de-watering, and bio-solids reuse as applications require.

Blue Water supplies standard equipment ranging in sizes suitable for small communities to large cities. There is no limitation in flow capacity designs. Blue Water's Eco MAT™ RBF is available in eight unique models that can be customized for varying capacities and redundancy, facilitating treatment in excess of 3 MGD (115 L/s) in a single unit. Blue Water also provides the duplex unit designs for redundancy, as well as cartridge units for channel mounting that can be more economical for plants treating 20 to 100+ MGD (1000 to 10,000 L/s).

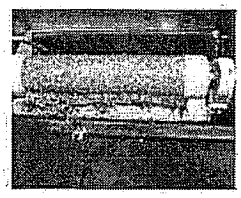

The solids drop into a hopper and the screen is cleaned as it moves past the rollers. Optional hot water wash cleans oil and grease.

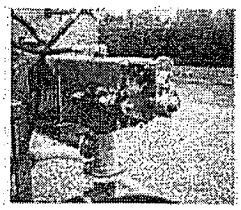

Dewatering screens pass paint filter test. Generally suitable for land filling.

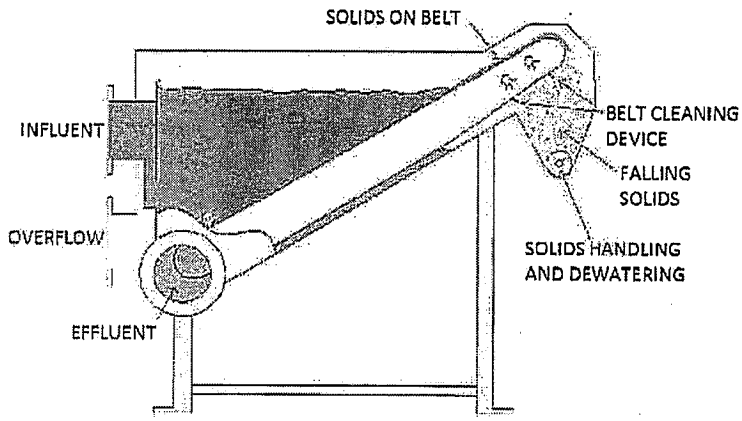

Blue Water's ECO MAT™ RBF Operation Diagram

Download printable version [US Standard | Metric]

Blue Water for a Green World™

Blue Water Technologies, Inc.
10450 N. Airport Drive | Hayden, ID 83835-9742
phone: 888.710.2583 | fax: 208.209.0396
© 2014 Blue Water Technologies, Inc.

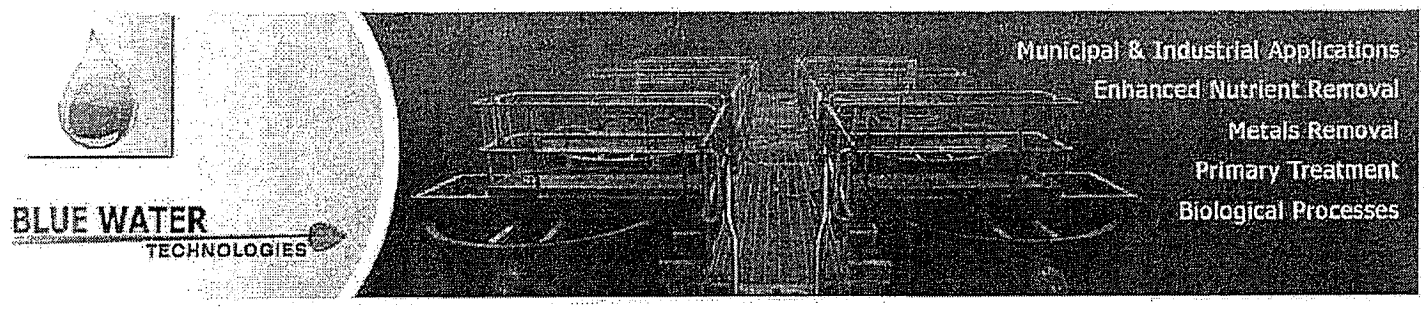

Blue PRESS®

Blue PRESS® The Blue PRESS® Screw Press product line is a result of over 40 years of de-watering technology experience. Blue Water offers the press as a stand-alone solution to customer needs or as an integral piece of a treatment solution. With application history in varied industries and processes, the Blue PRESS® Screw Press is a customized solution to sludge and similar industrial waste mitigation.

In addition to stand-alone systems, many of Blue Water's wastewater treatment solutions, such as Blue Water's Eco MAT™ Rotating Belt Filter (RBF) and the Eco DAF™ process incorporate the Blue PRESS® Screw Press for solids dewatering and treatment. Blue Water's Eco MAT™ RBF is a mechanical system that removes 50-70% of solids as a municipal primary solution or as a chemical-free industrial screenings/filtration process. The solids slurry from the Eco DAF™ process or the Eco MAT RBF is often dewatered for disposal in a landfill or treated to achieve Class B or Class A composted biosolids followed by de-watering. The Blue PRESS® Screw Press is the integral solution to the de-watering portion of these processes.

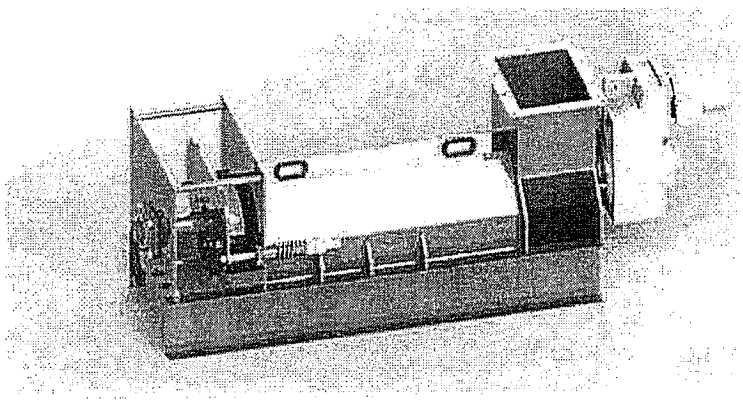

All Blue Water Presses are modeled in 3D CAD

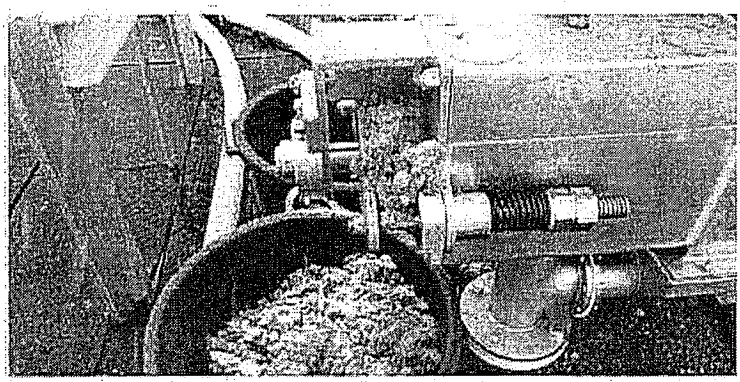

The Constant Back-pressure Design is Key to Reliability

How It Works

Installations:

Camp Pendleton, CA
Centra-flo® - 4.0 MGD

The Blue PRESS® Screw Press has proven success in a variety of industries including agriculture, meat processing, oil and gas, human and animal waste, etc. It incorporates a graduated pitch and interrupted flight screw. Final pressing is controlled by a pneumatically actuated cone that adjusts the solids content of the press cake. Engineered with profile bar screens and hard-surfaced wear points, the Blue PRESS® Screw Press is a sustainable selection for service on screen rejects, shives, knots, and clarifier sludge. Inbound sludge averaging between 2-20% dry solids is controllable to between 25-55% solids.

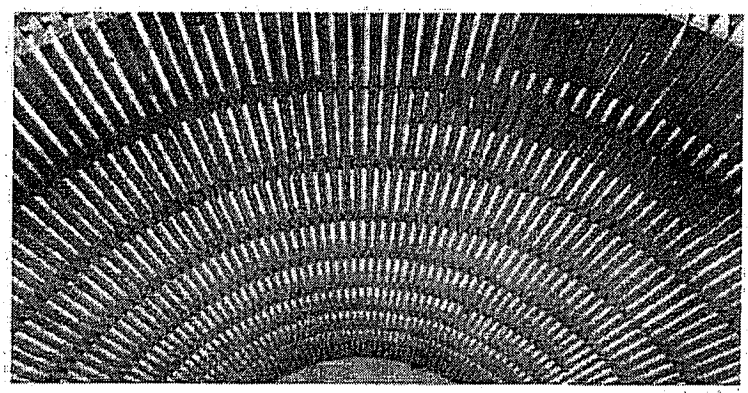

Using an engineered wedgewire screen, the Blue PRESS® Screw Press dries sludge to 25-55% solids content.

Blue PRESS® Screw Press Applications:

- Human and animal manure
- Meat processing
- Biosolids de-watering
- Food waste
- Agricultural processing
- Energy/biogas/biofuel processing
- Pulp and paper
- Recycling
- Screenings
- Clarifier sludge

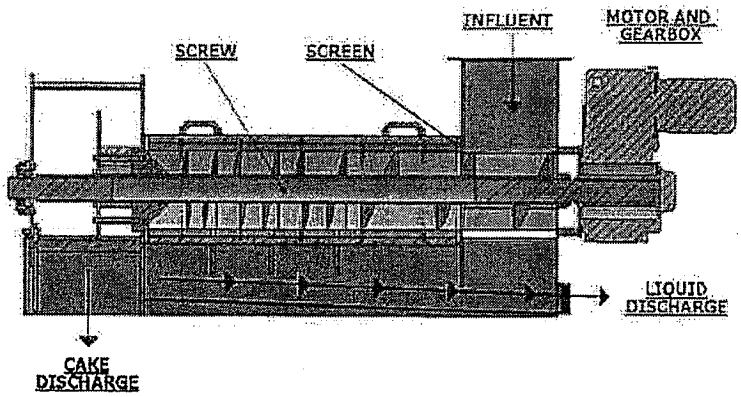

Blue PRESS® Screw Press Operations Diagram

Blue PRESS® Screw Press Capacities and Dimensions

Model	Capacity TPD, GS	Capacity GPM	Screw RPM	HP	Length FT	Width FT	Height FT	Weight LBS
SP-4	0.5 - 1	6	27	1.5	3.5	1.2	1.5	500
SP-6	2 - 4	20	26	6	7	1.5	2.5	1,000
SP-10	5 - 10	70	16	15	9	2	3	2,000

SP-12	10 - 20	150	14	25	13	2.5	4	8,000
SP-16	20 - 45	300	13	30	19	4	5	12,000
SP-24	40 - 100	600	9	60	24	5	6	28,000
SP-30	60 - 150	1200	7	125	35	7	9	62,000

Click here for a printable version...

Blue Water for a Green World™

Blue Water Technologies, Inc.
10450 N. Airport Drive | Hayden, ID 83835-9742
phone: 888.710.2583 | fax: 208.209.0396
© 2014 Blue Water Technologies, Inc.

NB #5
CC 7/21/16

Escanaba Area Public Schools

Non-Homestead Millage Renewal

What you Need to Know:

On Tuesday, August 2, 2016, the Escanaba Area Public School District is asking voters to renew of the current 18 mills non-homestead operating millage that has been levied since 1997.

This proposal will not impact taxes on residential property --only second homes, commercial/industrial properties are affected. This is not a new or increased tax, but a renewal of the District's current levy.

The Non-Homestead Millage makes up approximately $3.8 million of the Escanaba Area Public Schools' 22 million dollar annual budget. Renewal of the non-homestead millage will allow the district to maintain its current programs offered by the district. If this funding is lost, the district cannot replace it with any other funding source.

Even though primary households are not affected by this millage, state law requires a district-wide election to approve the millage.

➢ **VOTE**
Tuesday, August 2

In Summary:

- This is NOT a new or increased tax
- This is a **renewal** of the current non-homestead millage, approved by the voters in 1997
- This renewal is for a period of 15 years
- This is a tax assessed against businesses and second homes, NOT a tax on homeowners
- All residents in the Escanaba Area Public School district vote on the renewal
- The money is used for district operations
- This money cannot be replaced by other funding sources

Paid for by the Escanaba Area Public Schools
500 Ludington Street, Escanaba, Michigan 49829
To Learn More: If you have specific questions or would like more information regarding the non-homestead millage renewal, please contact the Escanaba Area Public Schools' Business Office at (906) 786-5412 or visit www.eskymos.com.

Non-Homestead Millage Renewal
Frequently Asked Questions

What does non-homestead mean?
Examples of non-homestead property include: most industrial and commercial property, second homes, and some agricultural property. It DOES NOT include a family's primary home.

Is this a new tax?
No. This non-homestead millage was last passed in 1997. The current millage expires with the 2016 tax levy. It is NOT a new or increased tax to any taxpayer.

My primary residence is in the Escanaba Area Public Schools District. If the non-homestead millage renewal passes, will my property taxes increase?
No. The tax applies to non-homestead properties like commercial property--not your primary residence.

I thought schools no longer received funding through property taxes. Why is the Escanaba Area Public Schools asking for a millage renewal?
Funding for Michigan school districts changed significantly when voters passed Proposal A in 1994. Under proposal A, the state funds a portion of what public school districts need to operate, but to receive full funding, the schools must levy 18 mills on non-homestead property within the district.

How are Michigan school districts funded?
The State of Michigan collects taxes (6 mills) on all properties to support schools, and the funds collected go into one big pot called the School Aid Fund. The State pays an amount for every pupil (next year Escanaba will get $7511 per pupil) from the School Aid Fund, and that constitutes Escanaba's "state funding." Escanaba's <u>local funding</u> comes from the 18 mills levied on non-homestead property, bringing in approximately $3.8 million.

What if the renewal does not pass?
If the non-homestead millage is not renewed, the District will lose approximately $3.8 million from its budget. This would be about a 17% reduction of the operating budget. The State of Michigan will not replace the lost revenue; therefore, Escanaba Area Public Schools would have to reduce programs and staff to reach a balanced budget.

What does the ballot language say?
This proposal will allow the school district to continue to levy the statutory rate of not to exceed 18 mills on all property, except principal residence and other property exempted by law, required for the school district to receive its revenue per pupil foundation allowance and renews millage that will expire with the 2016 tax levy. Shall the currently authorized millage rate limitation of 18 mills ($18.00 on each $1,000 of taxable valuation) on the amount of taxes which may be assessed against all property, except principal residence and other property exempted by law, in Escanaba Area Public Schools, Delta and Marquette Counties, Michigan, be renewed for a period of 15 years, 2017 to 2031, inclusive, to provide funds for operating purposes; the estimate of the revenue the school district will collect if the millage is approved and levied in 2017 is approximately $3,841,044 (this is the renewal of millage that will expire with the 2016 tax levy)? Yes____ No____

What if I will not be able to get to the polls on August 2, 2016?

Voters may download an Absentee Voter Request Form at the Delta County Clerk's Website at: https://www.deltacountymi.org/pages.php?ID=83
The left-hand side of the main page has a link to "Elections." Clicking that link brings up a pop-up menu with an Absentee Voter Request Form. The form may be filled out and then printed. These ballots may be turned in at the city or township clerk's office up until the day before the election. For more information, please contact Nancy Kolich, County Clerk. She can be reached in her office at (906) 789-5105 or between the hours of 8:00 a.m. and 4:00 p.m. at 310 Ludington Street in Escanaba.

thebonifas
arts center

N.B #6
CC 7/21/16

July 13, 2016

Escanaba City Council
c/o Jim O'Toole, City Manager

Dear City Council:

Please adopt the attached Resolution in support of a grant application to the Michigan Council for the Arts and Cultural Affairs seeking $3,215 in matching funds for the Music Mondays Summer Concert Series. The grant proposes a collaborative effort between the City and the Bonifas to enrich the cultural lives of area residents through exposure to new music. The Bonifas is requesting that the City serve as lead applicant for this grant application since we have already received grant monies in this funding cycle and cannot receive a Mini Grant in 2017. The Resolution is a required component of the grant to confirm the City's approval to seek the grant and to comply with administering it (if awarded).

The grant proposes seven "Music Mondays" in the evenings throughout June, July and August featuring artists/bands in the City band shell in Ludington Park along with a brief music appreciation segment led by some of the area's finest educators. This will be an increase from 2016 Music Mondays six concert series. The 2017 schedule will begin on the last Monday in June and continue until the first Monday in August. The Bonifas will coordinate the artists and educators and promote the events across the region.

The grant recipient's obligation under the grant is to serve as administrator of the funds which would entail; tracking and reporting on the grant funds received/expended from MCACA, documenting the City's in-kind contribution of facility use and staff time, compensating artists for their services and the Bonifas for organizing and promoting the events. The Bonifas would be happy to perform these asks on behalf of the city.

For the Council's reference, included are supporting materials to further the 2017 Music Mondays plan. The following Youtube video is from 2016 Music Mondays MCACA Mini Grant application: https://youtu.be/ky42O-OQUsw. The poster used to promote this year's Music Mondays is also attached.

If there are any questions regarding this request please feel free to contact me.

Sincerely,

Christina Diment

Christina Diment
Events Coordinator
906-786-3833 Ext. 16
events@bonifasarts.org

thebonifas
arts center

MUSIC MONDAYS

Held at the Ludington Park band shell in Escanaba

Ask the Band at 6:30 PM

Show starts at 7:00 PM

***In the event of inclement weather, concert will be held at the band shell the following day**

June 27th	Say What?
July 11th	The Classics
July 18th	Flat Broke Blues Band
July 25th	Phil Lynch Quartet
August 1st	ToHuBoHu
August 8th	Cadillacs

Sponsored by: City of Escanaba, U.P. State Credit Union, Northern Insurance Agency, Andy's Diner & Crispigna's Restaurant

thebonifas arts center
700 1st Avenue South
Escanaba, MI 49829
www.bonifasarts.org

The John & Melissa Besse Foundation est. 2005

michigan council for arts & cultural affairs

Art Works. arts.gov

Resolution in Support of a Grant Application to the

Michigan Council for Arts and Cultural Affairs

AT A MEETING OF THE CITY COUNCIL OF THE CITY OF ESCANABA, MICHIGAN, HELD ON JULY 21, 2016

RESOLUTION - SUPPORTING THE GRANT APPLICATION TO THE MICHIGAN COUNCIL FOR ARTS AND CULTURAL AFFAIRS SEEKING MATCHING FUNDS FOR THE "MUSIC MONDAYS" SUMMER CONCERT SERIES.

WHEREAS, the City Council of the City of Escanaba, Michigan, does hereby find as follows:

WHEREAS, the City desires to support the cultural lives of area residents through opportunities to be exposed to new art and music;

WHEREAS, the City has an excellent partner in the Bonifas Arts Center to successfully organize and promote community events, and educate the public through music appreciation programming;

WHEREAS, the City will administer the grant funds, if awarded, as set forth in the application;

WHEREAS, the City has a policy detailing equal opportunity provisions for job applicants and public accommodations and agrees to conform to the Assurances and Guidelines set forth in the application;

NOW, THEREFORE, BE IT HEREBY PROCLAIMED by the City Council of the City of Escanaba, Michigan, that the grant application should be made to the Michigan Council for Arts and Cultural Affairs for the August 3, 2016 deadline.

City Council, Escanaba, MI Dated:

Attest

_____ Dated:

Clerk, City Council
City of Escanaba, Delta County, State of Michigan