PLANNING COMMISSION
REGULAR MEETING AGENDA
April 9, 2015, at 6:00 p.m.

Patrick Connor, Chairperson
Kel Smyth, Vice-Chairperson
Roy Webber, Secretary
Brian Black, Commissioner
Tom Warstler, Commissioner
James Hellermann, Commissioner

Christine Williams, Commissioner
Steve Buckbee, Commissioner
VACANCY

James V. O'Toole, City Manager
Ronald Beauchamp, City Council Liaison

City Hall/Library Complex, 410 Ludington Street, Room C101 Council Chambers, Escanaba, MI 49829

Thursday, April 9, 2015, at 6:00 p.m.

CALL TO ORDER
ROLL CALL
APPROVAL/CORRECTION(S) TO MINUTES – March 18, 2015
APPROVAL/ADJUSTMENTS TO THE AGENDA
CONFLICT OF INTEREST DECLARATION
UNFINISHED BUSINESS - None
PUBLIC HEARING(S)

1. **Special Land Use Permit – Patrick Barron Properties, LLC – 2808 North 28th Street - Communication Tower and Equipment Shelter.**
   Explanation: Patrick Barron Properties, LLC is proposing to construct a 115' monopole communication tower and shelter facility at 2808 North 28th Street, Escanaba. A public hearing on the special land use permit will take place so that there is a public understanding of the project.

2. **Special Land Use Permit – Delta County U.P. State Fair Authority – On or around 9th Avenue North (Undeveloped).**
   Explanation: The Delta County U.P. State Fair Authority is requesting an 18 month special land use permit be issued which would allow property that is owned and controlled by the Authority near 9th Avenue North to be leased to the American Transmission Company which will be used as a temporary storage facility for ATC's Bay Lake transmission line construction.

NEW BUSINESS

1. **Update – MEDC Redevelopment Ready Communities – DRAFT Report of Findings.**
   Explanation: The MEDC Redevelopment Ready Communities program is a certification program which supports community revitalization and the attraction and retention of businesses, entrepreneurs and talent throughout Michigan. The City of Escanaba is one of nineteen communities in Michigan enrolled in the program. The Planning Commission will review the DRAFT Report of Findings.

2 **Update – Community Master Planning Process.**
   Explanation: Representatives of the CUPPAD Regional Commission will provide an update to the Planning Commission on the progress made in developing a timeline for the completion of the Community Master Plan.

3. **Project Updates:**
   a. Zoning Board of Appeals Hearings/Decisions.
   b. Superior Trade Zone Update/ MSHDA/SHPO Certified Local Government Program Update.
   c. Delta County Planning Commission Update. The Planning Commission will be updated on the activities at the latest Delta County Planning Commission Meeting.
   d. Zoning/Land Use Permit Update.
   e. Various.

GENERAL PUBLIC COMMENT
COMMISSION/STAFF COMMENT AND ANNOUNCEMENTS
ADJOURNMENT

The City of Escanaba will provide all necessary, reasonable aids and services, such as signers for the hearing impaired and audiotapes of printed materials being considered at the meeting to individuals with disabilities at the meeting/hearing upon five days notice to the City of Escanaba. Individuals with disabilities requiring auxiliary aids or services should contact the City of Escanaba by writing or calling City Hall at (906) 786-9402.

Respectfully Submitted,

Patrick Connor, Chairperson
Planning Commission

PLANNING COMMISSION MEETING
ESCANABA, MICHIGAN
March 18, 2015

A meeting of the Escanaba Planning Commission was held on Wednesday, March 18, 2015, at 6:00 p.m. at the Catherine Bonifas Civic Center, 225 North 21st Street, Escanaba, MI 49829.

PRESENT: Chairperson Patrick Connor, Commissioners Roy Webber, Brian Black, James Hellermann, Stephen Buckbee, Christine Williams and Tom Warstler

ALSO PRESENT: City Manager Jim O'Toole, Executive Secretary Kim Peterson, Engineering Assistant Terry Flower, Code Official Blaine DeGrave, DDA Director Ed Legault, Water/Wastewater Superintendent Jeff Lampi, Real Estate Manager for Meijer Cris Jones and Structural Engineer/Principal of U.P. Engineers and Architects George Kiiskila.

EXCUSED ABSENT: Vice Chairperson Kel Smyth

Chairperson Connor called the meeting to order at 6:00 p.m.

Roll Call

Executive Kim Peterson conducted the roll call.

Approval/Correction of the February 12, 2015, Planning Commission Meeting Minutes

A motion was made by Commissioner Buckbee, seconded by Commissioner Hellermann, to approve the February 12, 2015, Meeting Minutes. Ayes were unanimous.

Approval/Adjustments to the Agenda

None.

Conflict of Interest Declarations

None.

UNFINISHED BUSINESS

None.

PUBLIC HEARING

Site Plan Review – Meijer – 505 North 26th Street – Between 3rd Avenue North and 6th Avenue North

City Manager O'Toole stated Meijer is proposing to construct a 208,447 square foot retail, grocery facility along with a 2,509 s.f. gas station at property owned and/or controlled by Marvin R. Pouliot & Frank Stropich, a Michigan Corporation. A public hearing on the site plan will take place so that there is a public understanding of the project.

City Manager O'Toole stated the property owner/applicant is Meijer, Inc. out of Grand Rapids, MI. The type of request is in accordance with Section 1801.3. Site Plan Required of Escanaba's Zoning Ordinance, a site plan review for Land Use Permit must be conducted prior to the use permit issuance. Current zoning is Commercial "E" District. The Ordinance that is overseeing this project is Ordinance No.1028 Escanaba Zoning Ordinance.

The description of the proposed project is a 208,447 s.f. retail/grocery store and a 2,509 s.f. gas station.

Compliance with development standards are as follows:

1. The proposed construction (building) will be located on property which is zoned Commercial "E' District. The proposed use is a permitted use by right as defined in section 1002.1.B. and 1002.1.Q., 1002.1. R. and 1002.1.S. of the Escanaba Zoning Ordinance.
2. The proposed construction will meet Zoning Ordinance standards for a Commercial "E" District.
3. The proposed construction site plan diagram complies with Chapter 18. Site Plan and Sketch Plan Standards, Section 1802 Site Plan Diagram/Requirements; paragraph 1802.2 Site Plan Diagram Requirements, subparagraphs A-X.
4. In accordance with the requirements found in Chapter 18., Site Plan and Sketch Plan Standards, Section 1803 Site Plan Review, paragraph 1803.1.1.1. Two Pre-Application Conferences were scheduled and conducted. Once on October 21, 2014, and once on February 25, 2015. Since the publishing of this report, two additional meetings have been held.
5. In accordance with the requirements found in Chapter 18. Site Plan and Sketch Plan Standards, Section 1803 Site Plan Review, paragraph Section 1803.1.1.2 Application, the applicant applied for site plan consideration as required.
6. All fee and notification requirements of the Ordinance have been accommodated.

Duties of the Planning Commission follow:

In accordance with Chapter 18., Site Plan and Sketch Plan Standards, Section 1803 Site Plan Review, paragraph 1803.2. Public Hearing Requirement, prior to voting on a final site plan, the Planning Commission must hold a Public Hearing so as to facilitate public review and understanding of the proposed development.

In accordance with Chapter 18., Site Plan and Sketch Plan Standards, Section 1803 Site Plan Review, paragraph 1803.3. Planning Commission Review, once a site plan is forwarded to the Planning Commission, the Planning Commission is required to review the site plan according to the standards and requirements of Chapter 18., Site Plan and Sketch Plan Standards. The Planning Commission must approve or deny the site plan according to the standards and requirements of the Zoning Ordinance within 45 days of submission of said plan.

In accordance with Chapter 18., Site Plan and Sketch Plan Standards, Section 1803 Site Plan Review, paragraph 1803.4. Site Plan Approval, should the Planning Commission approve the

site plan, the applicant, the owner of record, or the legal representative thereof, the Planning Commission Chairperson and one other member of the Planning Commission shall each sign four copies of the approved site plan. The Planning Commission shall transmit one signed copy of the plan and any conditions attached to the Code Official, and one signed copy each to the office of the City Clerk and the applicant. One signed copy shall be retrained in the Planning Commission file.

In accordance with Chapter 18., Site Plan and Sketch Plan Standards, Section 1803 Site Plan Review, paragraph 1803.5.1. Site Plan Rejection, should the Planning Commission reject the site plan, the property owner may appeal the decision to the Zoning Board of Appeals.

Site Plan Approval Standards follow:

In accordance with Section 1804. Site Plan Approval Standards of Escanaba's Zoning Ordinance, the proposed site conforms to the following site development standards:

A. The main entrance faces 3rd Avenue North of both the retail store and the gas station.
B. All roof mounted equipment will be screened.
C. Reasonable and visible sound mitigation measures have been taken.
D. The building is arranged to permit adequate emergency access to all sides of both buildings.
E. The development has legal access to two public streets.
F. The development provides for vehicular and pedestrian circulation.
G. A pedestrian circulation system is provided.
H. All parking areas are designed to facilitate safe and efficient vehicular and pedestrian circulation.
I. Unnecessary curb cuts were eliminated
J. All loading and unloading areas and outside storage areas shall be adequately screened.
K. Exterior lights shall be reflected downward and away from adjacent properties and right-of- ways.
L. Adequate utilities will be provided and placed underground.
M. All premises will be graded to prevent accumulation of stagnant water.

Staff findings, comment, general plan goals and conditions of approval are as follows:

A. The proposed use is consistent with the surrounding uses of the area.
B. The proposed use is a permitted use by right as defined in Section 1002.1.B. of the Escanaba Zoning Ordinance and Section 1002.1.5.S.
C. In accordance with the Comprehensive Plan, Page 45, Major Areas of Interest, the property is identified as a "Commercial Growth Area". Additionally, the Comprehensive Plan, Page 111 designates the area as a short term priority in creating a "Regional Retail Hub" which would accommodate regional retail big box stores.

Fiscal impact as follows:

Estimated Taxing Entity Revenue - Meijers Store, Escanaba, Michigan

		ESTIMATED VALUE		ESTIMATED VALUE		
		store	-	gas station		
		estimate	3,500,000	estimate	400,000	
			3,500,000		400,000	
Taxing Entity	Millage		Estimated revenue		Estimated Revenue	*Total*
School Operating	18.0000		63,000.00		7,200.00	$ *70,200.00*
State Ed	6.0000		21,000.00		2,400.00	$ *23,400.00*
City Services	17.0000		59,500.00		6,800.00	$ *66,300.00*
Delta County	6.8317		23,910.95		2,732.68	$ *26,643.63*
Escanaba School	4.7500		16,625.00		1,900.00	$ *18,525.00*
Bay College	3.3076		11,576.60		1,323.04	$ *12,899.64*
ISD	2.3851		8,347.85		954.04	$ *9,301.89*
DATA	0.6000		2,100.00		240.00	$ *2,340.00*
Total Millage	58.8744	$	206,060.40	$	23,549.76	$ *229,610.16*

Notice of Public Hearing was published in the Escanaba Daily Press Newspaper and meeting notices were mailed to the adjacent property owners of the project site. Staff report was posted on the City of Escanaba website for public review. The meeting agenda was posted on the City's official notice bulletin board and the City of Escanaba's website.

Standards and questions (findings of facts):

In accordance with Chapter 18., Site Plan and Sketch Plan Standards, Section 1801 General, paragraph 1801.1. Purpose, the Planning Commission must ensure that the plan outlines the use and development of the property and is designed to provide for the future growth and development of business that seek an aesthetically attractive working environment.

1. Is the development designed to integrate well with adjacent developments?
2. Is the development designed to minimize nuisance impacts on adjoining parcels?
3. Is the development designed to ensure safe and functional traffic access and parking?
4. Is the development designed to minimize impacts on sensitive environmental resources?

Discussion took place on the wetlands permit from DEQ. Mr. Kiiskila stated the wetland permit is in the public notice period with the 45 day government period ongoing.

City Manager O'Toole stated a new North 26th Street is being proposed which would hook up 3rd Avenue North with 6th Avenue North. This street was placed in the Community Master Plan in 2007 as part of the extension of the 6th Avenue North extension from Lincoln Road out to Willow Creek Road. As of right now, the cost of the road will be borne by the property owners who will benefit from such road. The gas station will be located off of 3rd Avenue North and the

grocery store will be located within the middle of the parcel. Majority of the wetlands will be located to the west of the parcel.

Cris Jones stated there have been five meetings prior to tonight to work out various issues within the ordinances. Meijer is a Michigan based company founded in 1934 and has been in the Meijer family for 81 years and is a private company. There are 213 locations within five states with 113 being located in Michigan. This year, a Milwaukee store will be open which will be the sixth state Meijer will operate in. Meijer has a tremendous presence in Michigan with employment of approximately 50,000 people. Facilities are located in Lansing and Holland for distribution, food processing, in addition to headquarters in Grand Rapids along with a distribution center. This particular store will be 205,308 s.f. and will employ approximately 210-250 people within various departments and at various different levels to include leadership. Three shifts are run with approximately 70 employees per shift and are open 24 hours a day 364 days a year. This will be a $15 million investment in the community. The site plan minimizes the wetland impact as much as possible. The parking lot angles to minimize the wetland impact on the west side of the parking lot and placed the loading docks in the rear of the store rather than typically on the side of the store to minimize wetland impacts in the back. There are approximately two acres of wetland impacts and will be replaced on site with four acres of additional wetlands. The large pond in the back is creating wetlands and creating a wet area to include a pond which will discharge and hydrate the wetlands. Working with the DEQ on wetland issues.

Chairperson Connor questioned the retention pond to the north whether it would be fenced. Mr. Jones stated there are no plans to fence it; however, they can certainly do so if it is required. Chairperson Connor asked how deep the retention pond would be. Mr. Kiiskila stated 1 – 2' deep, and there is not a fence plan as there is no requirement for such.

Chairperson Connor asked if the wetland permit was approved by DEQ. Mr. Kiiskila stated the 45 day permit application has been applied for and the 20 day public notice period has ended with the remaining 25 day review period being government entity review. No problems are being foreseen with such permit. The DEQ is satisfied with the two for one land swap, which is more like one and one-half to two swap.

Commissioner Black stated staff report didn't really address the utility issues. City Manager O'Toole stated utilities will be maintained within the City right-of-way which is North 26th Street and are being designed to meet City standards. Engineering Assistant Flower stated two meetings have taken place concerning utilities with U.P. Engineering and Architects and have no issues. All of the onsite storm sewer and sanitary issues are in compliance with all of the City needs. All utilities will be underground and are being sized to accommodate future development of other property within the area. City Manager O'Toole stated at this point Meijer is paying for all utilities unless a special assessment petition is filed by 51% of the property owners, which in this case is Meijer. The City Charter states the City Council shall make those improvements and special assess over five years.

Commissioner Black stated there would be potential for an increase of traffic in the area and questioned what contingency plan would be in place. City Manager O'Toole stated the City required a traffic study impact and has been working with MDOT. This particular project does not merge into a state highway, but will certainly impact such. MDOT was brought in early on into this process to make them aware of such traffic. Engineering Assistant Flower stated URS conducted a traffic study in October/November 2014 that addressed a lot of the traffic issues by comparing the existing traffic issues that are currently there to a foreseeable or projections of what might occur once the store is open. There are a few points of concern being 3rd Avenue North and North 30th Street, 3rd Avenue North and North Lincoln Road and 6th Avenue North on

both sides. There was nothing that raised alarms during this study as shifting of cars to different areas is what it amounted to and will bring more vehicles into the area.

Chairperson Connor questioned the cost of a new street light. Engineering Assistant Flower stated in the traffic study street lights were not specifically called for but did state may be needed in the future with no time given. City Manager O'Toole stated MDOT has been evaluating for some time the light at 6th Avenue North and North Lincoln Road.

Engineering Assistant Flower stated in the traffic study it specifically stated 3rd Avenue North and North 30th Street intersection needs to be developed differently. It calls to extend south of 3rd Avenue North to Ludington Street or US2 to make it wider with currently being two lane, but is wide enough for a three lane. MDOT wants to extend this north of Charter Communications to make the traffic flow differently. The City has looked at such and have discussed quite extensively.

Commissioner Williams stated the selection of trees was fabulous. She stated a Red Pine might be more viable to the soil in the area than a Norway Spruce.

Discussed the bottle return area which will be a separate entrance for doors to enter. There will be a bus shelter and conversations have taken place with DATA for routing and circulation.

Chairperson Connor opened the Public Hearing.

Sandra St. Peters questioned why the retention pond would not be fenced in. Chairperson Connor stated it wasn't a requirement because the depth didn't warrant such.

Ron Chouinard questioned the depth of the pond and stated he thought the requirements called for a fence if the retention pond was 2' deep.

City Manager O'Toole stated the requirement for fencing would be dictated by the insurance carrier as it was not a requirement in the Zoning Ordinance.

Fred Mathia stated he lived in Escanaba for 45 years and thanked Meijer for considering to build in Escanaba. He stated he likes places with competition and Escanaba is a dying City. He has shopped in a Meijer store before, and stated they are clean, plenty of room to move around and well lighted.

Joe Curran stated the roads in Escanaba are terrible. He stated 3rd Avenue North and 6th Avenue North, the traffic study states a traffic light is not required. He drives on these roads every day and cars going in and out from Peninsula Federal to 3rd Avenue North and cars backing up coming from Bay College into town on North 30th Street when people are turning into Wal-Mart on 6th Avenue North and it is a nightmare with cars going 55 mph. He is Vice President of the United Steel Workers at the papermill and started in 2008 and now 2015, there are 160 less jobs than when he started. Most of Meijer stores are unionized and he respects that, but he doesn't know if the site plan approval is the right thing to do.

City Manager O'Toole stated if the site plan is approved by the Planning Commission, he would recommend a condition of approval to have the verification and consensus of the traffic study results.

Commissioner Black questioned how long the process would take to implement traffic control lights at the intersection of North 30th Street and 3rd Avenue North.

Engineering Assistant Flower stated MDOT doesn't have jurisdiction over the City streets and would be the City's responsibility to look at all options. MDOT is assisting the City with conducting their own internal assessment and provide options. The process is not a long process and could take six months. In the study, it did state there was future work that would be needed such as extending the three lane through the 3rd Avenue North intersection on North 30th Street. MDOT will be changing the timing of the light on North 30th Street and Ludington Street and also on 3rd Avenue North and North Lincoln Road.

Speed limits on North 30th Street were discussed with the 40 mph being changed to 35 mph.

Mike Lavigne stated the project was being quoted as $7 million. City Manager stated this would be after construction value. Mr. Lavigne questioned whether the property would be valued at $7 million. City Manager O'Toole stated the building would be assessed at $7 million. Mr. Lavigne stated Meijer is notorious for re-evaluating their taxes after a period of time and questioned whether this could be afforded. City Manager O'Toole stated anyone can at this point. Mr. Lavigne questioned if the loss of tax revenue from all the closed businesses would be made up by the Meijer building as he can see half-dozen businesses closing. He further stated he hopes the City has plans for all the vacant buildings that would be created with Meijer coming in, and there are already a large number of vacant buildings.

Commissioner Hellermann stated the Planning Commission duties are to evaluate the site plan to make sure it is safe for the community, meets the Master Plan and is what the City wants for a building. It is not the Planning Commission call for the morality of the project.

Glenn White stated he drives the area in question every day and turning on North 30th Street has become more of a traffic back-up with Menards over the last few years. There is more traffic than in previous years and turning left coming into town on North 30th Street has caused a lot of backups and accidents. The increased traffic will cause more concerns at this intersection and travel on 3rd Avenue North. Coming to North 30th Street onto 3rd Avenue North has a wait of five to 10 minutes and is a dangerous intersection. The increased traffic will have an affect o this intersection. There is a need for a traffic control light in this area. He stated if 200 jobs are created with a population of 18,000 and the population stays at 18,000, then 200 jobs weren't created they were just taken from another business.

Terry Belgowan stated he buys groceries, but not car parts and competition is good.

Commissioner Buckbee stated David Schaaf would like his concerns read into the record. His concerns were wetlands, taxes and quality of jobs. City Manager O'Toole stated accommodations for the wetlands have been addressed. The figures that were given for tax revenues were generated by the City Assessor Daina Norden. An appeal could be done on the amount of taxes; however, the legislators are working on a bill to close that loophole and the City has a case before the Michigan Court of Appeals on the same matter.

Commissioner Black stated when he looks at the site plan, there are "fingers" extending to the parking lot area don't look like they are natural geographic. City Manager O'Toole stated the "fingers" were the holding ponds for the veneer wood that were manmade.

Chairperson Connor closed the Public Hearing.

Commissioner Webber stated he shopped at a Meijer store thirty years ago and was impressed with it. He works at the papermill and when he started they had 1500 employees and now they have around 1000. He stated the world is changing.

Commissioner Black stated he recognizes the effects on existing retailers in the community with a development like this and they are legitimate concerns of the community and assumes Meijer has experienced these concerns in other areas where they built stores, and they might have some data with the positive and negative impacts.

Mr. Jones stated 5 – 10 families will be moving to the area to run departments in leader positions. When a store is built they typically find it creates additional development around it. Meijer has sold $20 million in property within a year which surrounds the Meijer stores, such as Buffalo Wild Wings, Tim Hortons, Panda Express, Chick-fil-a, etc. Meijer has over 300 parcels they own and approximately 50 in agreements to be purchased. They also sell land to small shops. In Escanaba Meijer won't own additional property because the wetland areas. The land along and behind Wal-Mart will be marketable with the proposed $900,000 North 26th Street investment which will be 1300' with utilities.

Commissioner Hellermann stated by developing the store, the open property is for wetlands along North 30th Street. City Manager O'Toole stated North 30th Street is where a majority of the wetlands are located and the creek runs through.

Commissioner Warstler stated he appreciates the store and the quality of size and the impact it may have on stores in the community. He remembers the same thing when Wal-Mart came in and businesses are still open. He doesn't believe that development results in a zero sum as there is growth that is taking place. This project will perhaps bring in 5 – 10 families. He disagrees with any statement that suggests that Escanaba is a dying community, it is an evolving community. Family sizes have diminished from when he moved here 25 years ago. Many of the same things that brought him and his family here are still gems and jewels that will attract others to this community and believes the best days are ahead of us. There is water, natural beauty, schools, good government, etc.

Commissioner Hellermann questioned whether appealing the assessed value could be explained if Meijer has a history of doing such. Mr. Jones stated there is one closed store in their chain and that is in Newark, Ohio, which was closed earlier this year. They have a contract to sell such store already. He stated the question of assessment is tricky because the law provides that a municipality can reassess property every year and citizens can appeal their assessments. This is a statutory right. The assessments are challenged because Meijer feels the assessments are too high and they are not reflective of fair market value the same way a citizen who owns a home challenges their assessments. Meijer frequently challenge the taxes, and he would encourage everyone else to do so also.

Commissioner Webber questioned how many stores have an unionized workforce. Mr. Jones stated 112 out of 113. The operation of each store is up to the individual store's representative and every store is a profit onto itself.

Commissioner Black stated he would like the public to have education about the taxing issues. City Manager O'Toole stated it is a property owners right by law to challenge a tax evaluation. The Menard issue put a self-imposed deed restriction on a resale of the property and challenged the evaluation based on such. This is what is being appealed before the Court of Appeals. City Assessor Daina Norden has various methods of calculating assessed values and has to be able to demonstrate it and backstop it. If a property owner disagrees, the property owner is entitled by

right to appeal. At the Michigan Tax Tribunal, either parties disagree, the next step is the Court of Appeals. If the City or Menards disagree there, then both parties have the right to petition the Supreme Court of Michigan. Representative Kivela from Marquette and McBroom and Casperson partnered on a bill to be introduced to close this loophole.

A motion was made by Commissioner Warstler, seconded by Commissioner Webber, to approve the site plan for Meijer to be located at 505 North 26th Street, between 3rd Avenue North and 6th Avenue North, to construct a 205,308 s.f. retail, grocery facility along with a 2,509 s.f. gas station. The proposed use is consistent and compatible with the property, the proposed use is a use permitted by right within the zoning district, and it is consistent with the Comprehensive Plan. Condition of approval on verification and consensus of the traffic study involved. Upon a roll call vote, ayes were unanimous.

Recess at 7:08 p.m.

Reconvened at 7:15 p.m.

2015-20 Planning Commission Capital Improvement Plan

City Manager O'Toole stated annually the Planning Commission is required to prepare a Capital Improvement Plan (CIP) for the evaluation and identification of capital infrastructure projects in need of renovation, repair and/or construction. The CIP relates these capital project needs to the financial resources that will support the realization of an improvement and the timeframe in which both the financing and work will take place. A public hearing on the proposed plan will take place.

When reviewing the proposed projects, the Planning Commission should at a minimum consider the following issues:

* The project must be in conformance with the Master Plan, development policies of the city, and goals and objectives of the community.
* The project must be necessary to correct a dangerous and/or blighting condition.
* The project must be necessary to protect public health and/or safety.
* The project must be necessary to implement a priority housing or economic development project or opportunity.
* The project directly supports a priority City program.
* The project fulfils a State or Federal mandate.
* The project fulfils an approved, prior commitment of City funds.
* Adequate project details and justification have been provided.
* The project provides for the renewal and replacement of, and improvements to, existing public infrastructure and physical assets.
* The project implements the Goals, Objectives, and Policies of other Plan Elements of the Master Plan.
* The project is desirable in that it will enhance the desirability of the City of Escanaba as a place to live and invest.

City Manager O'Toole reviewed the 2015-20 Planning Commission Capital Improvement Plan. The City is not recommending in the budget any specific funding transfer from the general fund for Major and Local Street Funds; however, the City Council last year decided to go into the fund balance to do so.

DDA Director Ed Legault stated the low to moderate income survey that the DDA has been working on since last fall was just given today by CUPPAD and is in the process of putting the

package together to send to the certifier with the State of Michigan. Instead of being at 59.33%, they will actually be at approximately 76% low to moderate income. This will put the DDA in position for eligibility for grants again. There were a couple of projects that were put on hold based on no grant money being available due to the change in status. The State updated status last year from going to 55.9% to 59.33%, and the threshold for grant funding is 51%.

Commissioner Williams questioned there was a green fund from savings for projects such as the LED lights go into. City Manager O'Toole stated there is an optimization program by law, and the City is a customer and the City pays into the optimization fund and with the new lights, the City will pay less into such fund. The LED lights have been installed on the City Hall end of Ludington Street and South Lincoln Road to Ludington Street to approximately 3rd. The goal is to replace all the lights within the City.

DDA Director Legault stated there were complaints within the last year of the parking. A study was conducted and a Public Hearing and there are 1673 parking spots near or on Ludington Street. This was looked at and determined it wasn't enough parking if someone was not willing to walk. Many people don't realize the amount of DDA parking lots that are paved, lined and support are public. The DDA wanted to take a look at the education process to make it easier for visitors to find public parking just off of Ludington Street, as well as educate citizens. They are taking a look at how this can be done with consistent signage. Also, take a look at the parking lots as they have a story to see what was there originally as part of Escanaba. DDA Director Legault worked with the Historic Commission and researched to come up with some write ups for each of the parking lots, as well as historic pictures of what was there. This will be part of the signage. One side will be public parking signage and the other side will have a picture of what was there with a historic story to talk about it. One of the goals is to make downtown more walkable.

Water/Wastewater Superintendent Lampi stated the Wastewater Headworks' Building Roof is the front of the Wastewater Plant where the raw sewage comes in. It comes in really deep and they pump it up high and the roof is leaking.

Water/Wastewater Superintendent Lampi stated the sanitary sewer main replacement or repair is needed as it has failed in the past at the alley between 22nd Avenue South and 23rd Avenue South extending from Lake Shore Drive to 23rd Avenue South lift station. The sanitary sewer is approximately 11' deep and is narrow. Opinion of cost is $120,000 and is recommended in the budget at $120,000. Another sanitary sewer main replacement or repair (to place possibly deeper to better serve the areas to the north) is needed at the parking lot mall from or around 2300 Ludington Street North to the 2500 block of 3rd Avenue North. Opinion of cost is $140,000 and is recommended in the budget at $140,000. A sanitary sewer main replacement or repair is needed in the alley west of South 19th Street extending from 8th Avenue South to 10th Avenue South. This sanitary sewer has failed twice last year once repaired. Opinion of cost is $105,000 and is recommended in the budget at $105,000.

Hannahville 2% grant funds have been applied for the Civic Center Emergency Back-Up Generator. Nothing has been budgeted. It is the City's intent to make the Civic Center a full service emergency shelter, similar to when the substation went out.

Water/Wastewater Superintendent Lampi stated the SAW Grant is $1 million with $500,000 being dedicated to storm sewers and $500,000 being dedicated to sanitary sewers. Storm sewers will be focused on Ludington Street area to address problems of flow and existing and changing of pipe size. This will become a part of the asset management plan. DDA Director Legault stated C2AE is working with the DDA on a study. This study will tell the DDA how bad things

are and what needs to be replaced by priority. Then C2AE will help with the SAW Grant to obtain funds. The study has been ongoing for 4 – 5 months.

City Manager O'Toole stated the non-motorized pathway design has been discussed over the last several months on bike paths from various communities and everyone wanting to do something within their community connecting to other communities. At the Joint Government Meeting on March 11, 2015, an introduction of a county-wide bike master plan was done so everyone is working on the same goal. It was the consensus of those in attendance to bring this to the April 8, 2015, Joint Government Meeting.

(2015-20 Planning Commission Capital Improvement Plan attached).

A motion was made by Commissioner Williams, seconded by Commissioner Black, to accept the 2015-20 Planning Commission Capital Improvement Plan. Upon a roll call vote, ayes were unanimous.

NEW BUSINESS

Review – City of Gladstone Master Plan

City Manager O'Toole stated the City of Gladstone is in the process of updating their community Master Plan. Pursuant to the requirements of Section 125.3839(2) of the Michigan Planning Enabling Act, the City of Gladstone is requesting the City of Escanaba review and comment on any items within their proposed plan that may impact or affect the City of Escanaba.

City Manager O'Toole will send a letter to the City of Gladstone with recommendations to ensure that the trail systems interconnect.

Discussed the City of Escanaba working on their Master Plan and how the surrounding areas can synch together where possible. Other communities will also be reviewing the City's updated Master Plan when it is in draft format.

Project Updates:

A. Zoning Board of Appeals Hearings/Decisions – None.

B. Michigan (MEDC) Redevelopment Ready Communities Program – City Manager O'Toole stated a draft report was received yesterday. The report will be presented to the Planning Commission at their April 9, 2015, Meeting for discussion. It is hoped to have a Joint Meeting with the Planning Commission, Historic District Commission, DDA and City Council on either May 19th or May 20th to review the report. An administrative meeting with MEDC is scheduled for next week. In reviewing the draft of what they evaluated, City Manager O'Toole is very pleased on how the City came out.

C. Delta County Planning Commission Update – Chairperson Connor stated he misspoke last month as there was a meeting held in January. A meeting was held on February 2, 2015, and the discussion was on wind turbines and the distance between turbines and property lines.

D. Zoning/Land Use Permit Update – City Manager O'Toole stated one residential home for $335,000; two residential remodels for $36,000; three new commercials for just under $1,000,000; three commercial remodels at $42,000; and three demolitions at $128,000.

E. Various – City Manager O'Toole stated the Superior Trade Zone will go before the MEDC and Michigan Strategic Fund on March 24, 2015, in Lansing and he will be in attendance. The application has been filed, as well as the job study. The job study is projecting over twenty years the possibility of 2500 jobs created as a result of the Superior Trade Zone and a retention of 1700 jobs. The MSHDA/SHPO Certified Local Government Program has nothing new to report.

GENERAL PUBLIC COMMENT

None.

COMMISSION/STAFF COMMENT AND ANNOUNCEMENTS

City Manager O'Toole stated the City has terminated negotiations for the sale of City property with Basic Marine pending a positive outcome regarding the OSHA matter. The seawall construction is going through a permitting process. The DEQ assessing impacts.

City Manager O'Toole stated the Master Plan update is moving along and kick-off letters have been sent. An update by CUPPAD will take place at next month's meeting.

ADJOURNMENT

A motion was made by Commissioner Hellermann, seconded by Commissioner Warstler, to adjourn the meeting. The meeting adjourned at 8:12 p.m. Ayes were unanimous.

Patrick Connor, Chairperson
Escanaba Planning Commission

James V. O'Toole, City Manager
City of Escanaba

Roy Webber, Secretary
Escanaba Planning Commission

RB# 2
3/18/15

ESCANABA PLANNING COMMISSION RECOMMENDED CAPITAL IMPROVEMENT PLAN FISCAL YEAR 2015-2020

What is the Capital Improvement Program?

The City's Capital Improvement Program (CIP) is a multi-year planning instrument that drives the evaluation in identification of capital infrastructure projects in need of renovation. repair and/or construction. Capital projects range from road maintenance, road construction to the renovation of municipal facilities, to watermain and sewage system repair. The CIP relates these capital project needs to the financial sources that will support the realization and the timeframe in which both the financing and work will take place. The CIP is designed to report to City Council, the public, City Staff, and other interested parties the capital management and planning strategies of the City. To guide the City in making necessary physical public improvements, Chapter 21 Planning, of the Code of Ordinances and the Michigan Planning Enabling Act, P.A. 33 of 2008, as amended, requires the Planning Commission to annually prepare a recommended Capital Improvement Program (CIP). A capital improvement is any improvement and direct engineering cost which involves the construction, purchase, or renovation and/or replacement of a public way, space, building, structure, or utility. A capital improvement must have a useful life of five or more years. A capital improvement is not a recurring capital outlay expense item (such as a motor vehicle or a fire engine) or a general maintenance expense.

In considering the many benefits of capital improvement programming, it is important to highlight the fact that this document should be considered fluid and referenced as a guide for future growth and development. Most importantly, the proposed list of capital projects must reflect the overall goals and vision of the adopted Community Master Plan.

Elements of a good Capital Improvement Plan.

1. A good plan provides a means for coordinating and consolidating various departmental requests, thereby preventing duplication of projects and equipment.
2. A good plan establishes a system of examining and prioritizing the needs of the City, assuring that the most essential improvements are provided first.
3. A good plan provides an important implementation device for growth management.
4. A good plan coordinates physical planning with financial planning, allowing maximum benefit from available public funds.
5. A good plan allows sufficient time for investigation of project financing and implementation measures and proper technical design.
6. A good plan coordinates an equitable distribution of public improvements throughout the City.

PLANNING COMMISSION CAPITAL IMPROVEMENT PLAN EVALUATION STANDARDS.

When reviewing the proposed projects the planning commission should at a minimum consider the following issues:

* The project must be in conformance with the Master Plan, development policies of the city, and goals and objectives of the community.
* The project must be necessary to correct a dangerous and/or blighting condition.
* The project must be necessary to protect public health and/or safety.
* The project must be necessary to implement a priority housing or economic development project or opportunity.
* The project directly supports a priority City program.
* The project fulfils a State or Federal mandate.
* The project fulfils an approved, prior commitment of City funds.
* Adequate project details and justification have been provided.
* The project provides for the renewal and replacement of, and improvements to, existing public infrastructure and physical assets.
* The project implements the Goals, Objectives, and Policies of other Plan Elements of the Master Plan.
* The project is desirable in that it will enhance the desirability of the City of Escanaba as a place to live and invest.

Planning Commission Recommended Approval: _____

CITY MANAGER'S CAPITAL IMPROVEMENT OBJECTIVES:

* Make Escanaba a safe, viable and progressive City.
* Increase transportation, recreation and other public improvement opportunities for the citizens of Escanaba and visitors to Escanaba.
* Strengthen Escanaba's economy by increasing the tax base of the community so new growth can occur and the existing tax base can expand.
* Make City Government more responsive, accountable and cost-effective.
* Eliminate and/or correct public hazards and/or existing deficiencies within the City.

PRIORITY ASSESSMENT RATING SYSTEM:

1.	MANDATORY/CRITICAL	The project is operationally essential for the well-being and advancement of the community.
2.	NECESSARY	The project is a high priority for the advancement of the community.
3.	DESIRED	The project is not necessarily critical or necessary (but desired) in the community.
4.	OPPORTUNITY	The project cannot be funded under current economic conditions, but are desired provided a funding source becomes available.

SIGNIFICANT REVENUE SOURCES:

General Fund - The General Fund is the general operating fund of the City. It is used to account for all financial resources except those required to be accounted for in another fund.

Major Street Fund - This fund accounts for revenues and expenditures in connection with the street system designated as major streets by the State of Michigan. This fund is required under state law.

Local Street Fund - This fund accounts for revenues and expenditures in connection with the street system designated as local streets by the State of Michigan. This fund is required under state law.

Brownfield Fund - This fund accounts for the revenues and expenditures in connection with developing and maintaining contaminated properties in the Brownfield zone (city-wide). The major source of revenue is tax assessed on the growth and development of properties within the plan.

Grants Fund - This fund accounts for revenues from various sources, including City matching shares, received under one-time grants. Expenditures are restricted to accomplishing the goals as defined in the individual grant offers.

Land Development Fund - This fund accounts for revenues and expenditures in connection with the development and sale of City-owned land. It was established to provide on-going financing for water, sewer, storm sewer and street development on City-owned properties.

Gas Retirement Fund - This fund accounts for funds received from the sale of the City's gas utility in June 1965 to Michigan Consolidated Gas Company. By a vote referendum on November 2, 1965, the City is prohibited from expending any principal resulting from the sale. Additionally, the interest earned from the investment of the principal must be spent on "capital improvements" only.

Electric Utility Fund - This fund is used to record the operations of an electrical system.

Water Utility Fund - This fund is used to record the operations of a water system.

Wastewater Utility Fund - This fund is used to record the operations of a wastewater system.

Marina Fund - This fund is used to record the operations of a marina.

Downtown Development Authority Fund -- This fund is used to record the operations of the Downtown Development Authority.

FISCAL YEAR	PROPOSED ACTIVITY	FUND DESCRIPTION	OPINION OF COST	PRIORITY	REQUESTED BUDGETED AMOUNT	ACTUAL BUDGETED AMOUNT
	CAPITAL IMPROVEMENT PLAN 2015-16					
2015-16	**Resurfacing and Curb Repair City Wide – Major Streets** **Description:** The City has a responsibility to maintain, resurface and curb streets as they become deteriorated throughout the community. Routine resurfacing and curbing repairs as required. Street evaluation, prioritization, ranking and surface treatment type will be determined at a later date and a public hearing before the Planning Commission will be conducted prior to June 30, 2015.	Major Street Fund General Fund	$100,000	1	$100,000	
2015-16	**Resurfacing and Curb Repair City Wide – Local Streets** **Description:** The City has a responsibility to maintain, resurface and curb streets as they become deteriorated throughout the community. Routine resurfacing and curbing repairs as required. Street evaluation, prioritization, ranking and surface treatment type will be determined at a later date and a public hearing before the Planning Commission will be conducted prior to June 30, 2015.	Local Street Fund General Fund	$100,000	1	$100,000	
2015-16	**Sidewalk Repair and Maintenance Program - City Wide** **Description:** Routine repair and maintenance of existing sidewalk is needed City wide.	General Fund	$5,000	1	$5,000	
2015-16	**West Side Cross Country/Snow Shoeing/Hiking Recreational Trail Upgrades** **Description:** Look to upgrade the non-motorized recreational trail system and improve the conditions of the trail where possible. With significant increase in activity over the past couple of years, the City is also looking to relocate the current trail head to behind the Rod and Gun Club or by the Comfort Suites off of US 2-41. The increased activity has created a safety concern at the current trail head location.	Land Development Fund Private Donations Grants	$2,500	3	$2,500	
2015-16	**DDA District Curb Repair Program** **Description:** Funding to be allocated to repair most critical infrastructure repairs in the DDA District which could include street resurfacing, curb, brick pavers, sidewalk, and tree related problems-removal/replacement. Project evaluations, prioritization and ranking will be determined at a later date at a public hearing before the Downtown Development Authority Board of Trustees and Planning Commission.	DDA	$25,000	1	$25,000	
2015-16	**Downtown Building Facade Improvement Program - Rehabilitation** **Description:** Commercial building facades (located within the DDA District) will be upgraded and improved. Through these renovations, the City/DDA hopes to stimulate economic growth and redevelopment and add on improved visual quality of existing commercial properties.	DDA/Grants /Private Funds	$400,000	1	$0	

2015-16	**Downtown Building Facade Improvement Program- Design Services** **Description:** Commercial building facades (located within the DDA District) will be upgraded and improved. Through these renovations, the City/DDA hopes to stimulate economic growth and redevelopment and add on improved visual quality of existing commercial properties.	DDA Funds	$25,000	1	$25,000	
2015-16	**Downtown Property Acquisition, Purchase and Demolition Program** **Description:** Funding will be set aside for opportunity property acquisition, clearance/demolition and blight elimination with the intent to reuse, rebuild, repurpose or preserve future uses of the property. Additionally, funding is being set aside for property acquisition to accommodate the possible relocation of the DDA Market Place project.	DDA	$35,000 $170,000	2 1	$35,000 $170,000	
2015-16	**Power Pole Replacement** **Description:** The expected useable life of wooden poles is forty years. Within the Escanaba distribution system, many poles are approaching or have exceeded their expected life. Pole inspectors have identified poles within our system that need to be replaced.	Electric Fund	$250,000	1	$250,000	
2015-16	**Street Light Replacement** **Description:** There have been great advancements made in LED street lighting over the past few years. These advancements resulted in better products and more affordable fixtures. Replacement of the existing HID street lights and dusk-to-dawn lights with LED equivalents is planned. This project will take multiple years to complete. The City has approximately 1,550 street lights and 300 dusk-to-dawn lights on the distribution system.	Electric Fund	$100,000	1	$100,000	
2015-16	**Veteran's Park Tennis Courts Resurfacing** **Description:** Resurfacing of Veteran's Tennis Courts (2).	General Fund/ Donation	$12,000	2	$12,000	
2015-16	**Parking Lot Improvements – All DDA Parking Lots** **Description:** The DDA controlled parking facilities located at 100 block of 1st Avenue South, 1100 block of 1st Avenue North, North 14th Street and 1st Avenue North, South 10th Street and 1st Avenue South, North 9th Street and 1st Avenue North, South 8th Street and 1st Avenue South, 1st Avenue South and South 7th Street, 700 block 1st Avenue North and 600 block and 1st Avenue North will have new themed signage and general maintenance and restriping of parking surfaces. Signs for Ludington Street directing public to the off Ludington Street parking area will also be included.	DDA	$40,000	2	$40,000	
2015-16	**Market Place Construction** **Description:** The Escanaba's Farmer's Market has been in operation in downtown Escanaba since the 19th century. The Farmer's Market functions as a vital economic and social link between families, businesses, farmers and crafts people of the community. Project construction will take place either at the current site of the Farmer's Market on North 9th Street and 1st Avenue North or on Ludington Street and South 15th Street.	DDA Grants Private Funds	$900,000	2	To Be Determined	
2015-16	**DDA Center Court Facility and Grounds Improvement** **Description:** Improvements to the existing building and grounds to restore water damage will take place.	DDA	$45,000	1	$45,000	

2015-16	**Wastewater Headwork's Building Roof** **Description:** The existing roof covering the Headwork's Building will be repaired or replaced.	Wastewater Fund	$56,000	1	$56,000	
2015-16	**Sanitary Sewer Main Replacement or Repair – Alley Between 22nd Avenue South and 23rd Avenue South Extending From Lake Shore Drive to 23rd Avenue South Lift Station** **Description:** The current sanitary sewer main is in need of repair or replacement.	Wastewater Fund	$120,000	1	$120,000	
2015-16	**Sanitary Sewer Main Replacement or Repair – Mall Parking Lot Extending From or Around 2300 Ludington Street North to the 2500 Block 3rd Avenue North** **Description:** The current sanitary sewer main is in need of repair or replacement. Additionally, the replacement main will be lowered in grade and increased in diameter.	Wastewater Fund	$140,000	1	$140,000	
2015-16	**Sanitary Sewer Main Replacement or Repair – Alley West of South 19th Street Extending From 8th Avenue South to 10th Avenue South** **Description:** The current sanitary sewer main is in need of repair or replacement.	Wastewater Fund	$105,000	1	$105,000	
2015-16	**Emergency Back Up Generator - Catherine Bonifas Civic Center** **Description:** The Catherine Bonifas Civic Center is in need of a 120/240 volts A/C single-phase, 60 Hz, 50 kW minimum back-up generator. The generator would allow the Catherine Bonifas Civic Center to be transformed into an emergency shelter facility if there is ever a need before, during or after a disaster.	Military Surplus Grants	$50,000	2	$0	
2015-16	**Marina Sidewalk Replacement** **Description:** Replacement sidewalk of approximately 430 feet by 8 feet wide must be installed at the Marina west seawall between docks one and two due to the settling and cracking of the existing sidewalk.	Marina Fund	$20,000	2	$20,000	
2015-16	**Electrical Substation** **Description:** A new substation will be constructed to replace the substation currently in service at the Power Plant. The substation will be built in the area of the old compost site off of 20th Avenue North. The substation will consist of two main transformers, which will feed up to eight circuits. This project will take approximately two years to complete.	Electric Fund	$2,500,000	1	$2,500,000	$2,500,000
2015-16	**Substation Upgrade – West Side Substation – North 30th Street** **Description:** The West Side Substation is a primary distribution point for electrical customers on the west side of the City. Additional circuits are needed in the event that one of the existing circuits fails. All cables fail eventually, and having a spare circuit in place before we experience a failure will greatly reduce the outage that results from a failure.	Electric Fund	$150,000	1	$150,000	
2015-16	**Electrical Distribution System Repair – Ford River (along South M35)** **Description:** The City of Escanaba provides electricity to parts of Ford River along South M-35. A 2,000' section of underground distribution wire (cable, not wire) located on the Breezy Point curve will be replaced with new 1/0 15kV cable.	Electric Fund	$80,000	2	$80,000	

CAPITAL IMPROVEMENT PLAN 2016-17						
2016-17	**Resurfacing and Curb Repair City Wide – Major Streets** **Description:** The City has a responsibility to maintain, resurface and curb streets as they become deteriorated throughout the community. Routine resurfacing and curbing repairs as required. Street evaluation, prioritization, ranking and surface treatment type will be determined at a later date and a public hearing before the Planning Commission will be conducted prior to June 30, 2017.	Major Street Fund General Fund	To Be Determined	1		
2016-17	**Resurfacing and Curb Repair City Wide – Local Streets** **Description:** The City has a responsibility to maintain, resurface and curb streets as they become deteriorated throughout the community. Routine resurfacing and curbing repairs as required. Street evaluation, prioritization, ranking and surface treatment type will be determined at a later date and a public hearing before the Planning Commission will be conducted prior to June 30, 2017.	Local Street Fund General Fund	To Be Determined	1		
2016-17	**Sidewalk Repair and Maintenance Program - City Wide** **Description:** Routine repair and maintenance of existing sidewalk is needed City wide.	General Fund	To Be Determined	1		
2016-17	**West Side Cross Country/Snow Shoeing/Hiking Recreational Trail Upgrades** **Description:** Look to upgrade the non-motorized recreational trail system and improve the conditions of the trail where possible by either redirecting the trail to avoid the swamp where possible or adding to the trail. The addition of lighting where possible would provide the opportunity to use the trail more in the evening hours especially when the daylight season is shorter.	Land Development Fund Private Donations Grants	To Be Determined	3		
2016-17	**DDA District Curb Repair Program** **Description:** Funding to be allocated to repair most critical infrastructure repairs in the DDA District which could include curb, brick pavers, sidewalk, and tree related problems – removal/replacement. Project evaluations, prioritization and ranking will be determined at a later date at a public hearing before Downtown Development Authority board Trustees and Planning Commission.	DDA	$25,000	1		
2016-17	**Downtown Building Facade Improvement Program** **Description:** Commercial building facades (located within the DDA District) will be upgraded and improved. Through these renovations, the City/DDA hopes to stimulate economic growth and redevelopment and add on improved visual quality of existing commercial properties.	DDA Grants Private Funds	To Be Determined	1		
2016-17	**Downtown Pocket Park(s)** **Description:** Underutilized properties on Ludington Street will be designated as potential pocket park public space which would tie the publically owned parking lots located on 1st Avenues North and South to Ludington Street. The space would also serve as a public space during downtown special events.	DDA Grant	$120,000	3		

2016-17	**Power Pole Replacement** **Description:** The expected useable life of wooden poles is forty years. Within the Escanaba distribution system, many poles are approaching or have exceeded their expected life. Pole inspectors have identified poles within our system that need to be replaced.	Electric Fund	$250,000	1		
2016-17	**Street Light Replacement** **Description:** There have been great advancements made in LED street lighting over the past few years. These advancements resulted in better products and more affordable fixtures. Replacement of the existing HID street lights and dusk-to-dawn lights with LED equivalents is planned. This project will take multiple years to complete. The City has approximately 1,550 street lights and 300 dusk-to-dawn lights on the distribution system.	Electric Fund	$100,000	1		
2016-17	**Downtown Storm Sewer Project (SAW)** **Description:** Design and construction of a storm sewer project to alleviate flooding in the central retail corridor of Ludington Street along with repaving, curbing and construction of crosswalks to meet the current ADA Standards.	DDA/City/MDOT Grants	To Be Determined	1		
2016-17	**Construct North 26th Street Connecting 3rd Avenue North With 6th Avenue North** **Description:** The City continues to grow to the west and very developable commercial property needs to be opened up for future commercial developments and surrounding properties. Because the Wal-Mart Super Center is located in the general vicinity and will become a destination location, the North 26th Street expansion is needed so that additional property can be developed so that our economic base can be increased and traffic congestion can be diverted away from North Lincoln Road. This will also be a phase of construction to develop a grid of streets and utilities for future economic growth in the area.	Special Assessment Private	$1 million	1		
2016-17	**City of Escanaba Non-Motorized Pathway Design** **Description:** As part of the City of Escanaba Non-Motorized Pathway System Master Plan, a 10' wide pathway system will be engineered to include project costs for the following areas: 1) Willow Creek Road between 8th Avenue South to Ludington Street, 2) Municipal Dock to North 4th Street, 3) North 10th Street from 1st Avenue North to 3rd Avenue North, 4) 3rd Avenue North from North 10th Street to Stephenson Avenue, 5) Stephenson Avenue to Sheridan Road, 6) Sheridan Road to City limit, 7) North 26th Street and 16th Avenue North to North 26th Street to Danforth Road, 8) 5th Avenue South from South Lincoln Road to Ludington Park, 9) Lake Shore Drive from Ludington Park to M35.					
CAPITAL IMPROVEMENT PLAN 2017-18						
2017-18	**Resurfacing and Curb Repair City Wide – Major Streets** **Description:** The City has a responsibility to maintain, resurface and curb streets as they become deteriorated throughout the community. Routine resurfacing and curbing repairs as required. Street evaluation, prioritization, ranking and surface treatment type will be determined at a later date and a public hearing before the Planning Commission will be conducted prior to June 30, 2018.	Major Street Fund General Fund	To Be Determined	1		

2017-18	**Resurfacing and Curb Repair City Wide – Local Streets** **Description:** The City has a responsibility to maintain, resurface and curb streets as they become deteriorated throughout the community. Routine resurfacing and curbing repairs as required. Street evaluation, prioritization, ranking and surface treatment type will be determined at a later date and a public hearing before the Planning Commission will be conducted prior to June 30, 2018.	Local Street Fund General Fund	**To Be Determined**	1		
2017-18	**Sidewalk Repair and Maintenance Program - City Wide** **Description:** Routine repair and maintenance of existing sidewalk is needed City wide.	General Fund	**To Be Determined**	1		
2017-18	**West Side Cross Country/Snow Shoeing/Hiking Recreational Trail Upgrades** **Description:** Look to upgrade the non-motorized recreational trail system and improve the conditions of the trail where possible by either redirecting the trail to avoid the swamp, where possible, or adding to the trail. The addition of lighting, where possible, would provide the opportunity to use the trail more in the evening hours especially when the daylight season is shorter.	Land Development Fund Private Donations Grants	**To Be Determined**	3		
2017-18	**DDA District Curb Repair Program** **Description:** Funding to be allocated to repair most critical infrastructure repairs in the DDA District which could include curb, brick pavers, sidewalk, and tree related problems – removal/replacement. Project evaluations, prioritization and ranking will be determined at a later date at a public hearing before Downtown Development Authority board Trustees and Planning Commission.	DDA	**$25,000**	1		
2017-18	**Downtown Building Facade Improvement Program** **Description:** Commercial building facades (located within the DDA District) will be upgraded and improved. Through these renovations, the City/DDA hopes to stimulate economic growth and redevelopment and add on improved visual quality of existing commercial properties.	DDA Grants Private Funds	**To Be Determined**	1		
2017-18	**Downtown Side Street Facelift – 100 Block Stephenson Avenue to 6th Street** **Description:** Rehabilitation/refacing project will include repaving of the 100 blocks off of Ludington Street from Stephenson Avenue to 6th Street and will include repaving along with constructing crosswalks to meet the current ADA standards. Bad sidewalks and curbing as budget allows will also be addressed. This project will be done in phases to minimize disruption to businesses.	DDA City MDOT Grants	**$500,000**	1		
2017-18	**Power Pole Replacement** **Description:** The expected useable life of wooden poles is forty years. Within the Escanaba distribution system, many poles are approaching or have exceeded their expected life. Pole inspectors have identified poles within our system that need to be replaced.	Electric Fund	**$250,000**	1		

2017-18	**Street Light Replacement** **Description:** There have been great advancements made in LED street lighting over the past few years. These advancements resulted in better products and more affordable fixtures. Replacement of the existing HID street lights and dusk-to-dawn lights with LED equivalents is planned. This project will take multiple years to complete. The City has approximately 1,550 street lights and 300 dusk-to-dawn lights on the distribution system.	Electric Fund	$100,000	1		
2017-18	**Water Treatment Plant Garage Construction** **Description:** The Water Department is in need of a garage to house its fleet of City-owned vehicles. A garage is essential to provide a secure and safe location for vehicles used by the Department. These vehicles are required to respond to emergency call-outs 24 hours a day and need protection from the environment.	Water Fund/Grant Availability				
2017-18	**Escanaba-Hermansville Rail Trail** **Description:** The 23.76 mile inactive railroad corridor from Escanaba to Hermansville was acquired by the State of Michigan in December 2007. The State of Michigan Natural Resources Forest Management Division has land management responsibility for the corridor and is planning for use as a recreational rail trail. As part of this development, a trail connector linking the Fairgrounds property to the rail trail is being evaluated.	Michigan Resources Forest Management Division	**To Be Determined**	3		
CAPITAL IMPROVEMENT PLAN 2018-19						
2018-19	**Resurfacing and Curb Repair City Wide – Major Streets** **Description:** The City has a responsibility to maintain, resurface and curb streets as they become deteriorated throughout the community. Routine resurfacing and curbing repairs as required. Street evaluation, prioritization, ranking and surface treatment type will be determined at a later date and a public hearing before the Planning Commission will be conducted prior to June 30, 2019.	Major Street Fund General Fund	**To Be Determined**	1		
2018-19	**Resurfacing and Curb Repair City Wide – Local Streets** **Description:** The City has a responsibility to maintain, resurface and curb streets as they become deteriorated throughout the community. Routine resurfacing and curbing repairs as required. Street evaluation, prioritization, ranking and surface treatment type will be determined at a later date and a public hearing before the Planning Commission will be conducted prior to June 30, 2019.	Local Street Fund General Fund	**To Be Determined**	1		
2018-19	**Sidewalk Repair and Maintenance Program - City Wide** **Description:** Routine repair and maintenance of existing sidewalk is needed City wide.	General Fund	**To Be Determined**	1		
2018-19	**West Side Cross Country/Snow Shoeing/Hiking Recreational Trail Upgrades** **Description:** Look to upgrade the non-motorized recreational trail system and improve the conditions of the trail where possible by either redirecting the trail to avoid the swamp, where possible, or adding to the trail. The addition of lighting, where possible, would provide the opportunity to use the trail more in the evening hours especially when the daylight season is shorter.	Land Development Fund Private Donations Grants	**To Be Determined**	3		

2018-19	**DDA District Curb Repair Program** **Description:** Funding to be allocated to repair most critical infrastructure repairs in the DDA District which could include curb, brick pavers, sidewalk, and tree related problems – removal/replacement. Project evaluations, prioritization and ranking will be determined at a later date at a public hearing before Downtown Development Authority board Trustees and Planning Commission.	DDA	$25,000	1		
2018-19	**Downtown Building Facade Improvement Program** **Description:** Commercial building facades (located within the DDA District) will be upgraded and improved. Through these renovations, the City/DDA hopes to stimulate economic growth and redevelopment and add on improved visual quality of existing commercial properties.	DDA Grants Private Funds	To Be Determined	1		
2018-19	**Power Pole Replacement** **Description:** The expected useable life of wooden poles is forty years. Within the Escanaba distribution system, many poles are approaching or have exceeded their expected life. Pole inspectors have identified poles within our system that need to be replaced.	Electric Fund	$250,000	1		
2018-19	**Street Light Replacement** **Description:** There have been great advancements made in LED street lighting over the past few years. These advancements resulted in better products and more affordable fixtures. Replacement of the existing HID street lights and dusk-to-dawn lights with LED equivalents is planned. This project will take multiple years to complete. The City has approximately 1,550 street lights and 300 dusk-to-dawn lights on the distribution system.	Electric Fund	$100,000	1		
2018-19	**Neighborhood Historic Overlay – 1st Avenue South, South 7th Street and Lake Shore Drive** **Description:** The historic stock of residential structures sets the City apart from surrounding townships. The area between 1st Avenue South, South 7th Street and Lake Shore Drive is to be designated as an historic overlay district, which means it poses a high concentration of historic structures deserving to be preserved for the community. A neighborhood historic overlay district would provide a basis for the City to manage the appearance of the exterior of new structures and significant additions within this area. The overlay district would not be a local historic district, but a zoning tool used to preserve the architectural and historic integrity of the neighborhood.	General Fund	To Be Determined	3		
2018-19	**Neighborhood Enhancement Area** **Description:** There are two neighborhood enhancement areas identified in the Escanaba Comprehensive Plan. These areas are located on the east side of Lincoln Road to Stephenson Avenue and on both sides of Ludington Street from Ludington Street to 3rd Avenues North and South. The intent of the Neighborhood Enhancement Area is to concentrate code enforcement, infrastructure improvements, and home ownership programs to increase property value resulting in stabilized neighborhoods.	General Fund	To Be Determined	2		

2018-19	**Neighborhood Historic Overlay – 1300 – 1700 Sheridan Road** **Description:** The historic culture of this north side neighborhood sets the neighborhood apart from surrounding neighborhoods of the community. The area between 1300 - 1700 Sheridan Road is to be designated as an historic overlay district, which means it possesses a historical value deserving to be preserved for the community. A neighborhood historic overlay district would provide a basis for the City to manage the appearance of the exterior of new structures and significant additions within this area. The overlay district would not be a local historic district, but a zoning tool used to preserve the architectural and historic integrity of the neighborhood.	General Fund	**To Be Determined**	2		
CAPITAL IMPROVEMENT PLAN 2019-20						
2019-20	**Resurfacing and Curb Repair City Wide – Major Streets** **Description:** The City has a responsibility to maintain, resurface and curb streets as they become deteriorated throughout the community. Routine resurfacing and curbing repairs as required. Street evaluation, prioritization, ranking and surface treatment type will be determined at a later date and a public hearing before the Planning Commission will be conducted prior to June 30, 2020.	Major Street Fund General Fund	**To Be Determined**	1		
2019-20	**Resurfacing and Curb Repair City Wide – Local Streets** **Description:** The City has a responsibility to maintain, resurface and curb streets as they become deteriorated throughout the community. Routine resurfacing and curbing repairs as required. Street evaluation, prioritization, ranking and surface treatment type will be determined at a later date and a public hearing before the Planning Commission will be conducted prior to June 30, 2020.	Local Street Fund General Fund	**To Be Determined**	1		
2019-20	**Sidewalk Repair and Maintenance Program - City Wide** **Description:** Routine repair and maintenance of existing sidewalk is needed City wide.	General Fund	**To Be Determined**	1		
2019-20	**West Side Cross Country/Snow Shoeing/Hiking Recreational Trail Upgrades** **Description:** Look to upgrade the non-motorized recreational trail system and improve the conditions of the trail where possible by either redirecting the trail to avoid the swamp, where possible, or adding to the trail. The addition of lighting, where possible, would provide the opportunity to use the trail more in the evening hours especially when the daylight season is shorter.	Land Development Fund Private Donations Grants	**To Be Determined**	3		
2019-20	**DDA District Curb Repair Program** **Description:** Funding to be allocated to repair most critical infrastructure repairs in the DDA District which could include curb, brick pavers, sidewalk, and tree related problems – removal/replacement. Project evaluations, prioritization and ranking will be determined at a later date at a public hearing before Downtown Development Authority board Trustees and Planning Commission.	DDA	**$25,000**	1		

2019-20	**Downtown Building Facade Improvement Program** **Description:** Commercial building facades (located within the DDA District) will be upgraded and improved. Through these renovations, the City/DDA hopes to stimulate economic growth and redevelopment and add on improved visual quality of existing commercial properties.	DDA Grants Private Funds	**To Be Determined**	1		
2019-20	**Power Pole Replacement** **Description:** The expected useable life of wooden poles is forty years. Within the Escanaba distribution system, many poles are approaching or have exceeded their expected life. Pole inspectors have identified poles within our system that need to be replaced.	Electric Fund	**$250,000**	1		
2019-20	**Street Light Replacement** **Description:** There have been great advancements made in LED street lighting over the past few years. These advancements resulted in better products and more affordable fixtures. Replacement of the existing HID street lights and dusk-to-dawn lights with LED equivalents is planned. This project will take multiple years to complete. The City has approximately 1,550 street lights and 300 dusk-to-dawn lights on the distribution system.	Electric Fund	**$100,000**	1		

OPPORTUNITY IMPROVEMENTS SHOULD FUNDING SOURCE BECOME AVAILABLE

Ludington Street Reconstruction – Projected Estimate $25 million

Description: Designed streetscape and upgrade all utilities of the East Ludington Street Corridor from Stephenson Avenue to 2nd Street, include side streets to 1st Avenues North and South.

Wastewater Plant Expansion – Projected Estimate: $10.5 million

Description: The existing Escanaba Wastewater Treatment Plant handles all of the residential, commercial and industrial wastewater generated in the City. The plant was built in 1933 and is rated at 2.2 million gallons per day. A major treatment upgrade was done in 1973, but the capacity remained the same. The existing flows at certain times of the year approach and often exceed the design capacity. Additionally, the City of Escanaba will exceed design capacity more frequently when the ground water level rises. This is due to the poor condition of the old sanitary sewer collection system.

3rd Avenue South Pocket Park (1st and 3rd Avenues South and South 30th Street – 3.93 Acres) – Projected Estimate $150,000

Description: The parcel located between 1st and 3rd Avenues South and South 30th Street consists of 3.93 acres of land bordered by a floodplain and consisting of a naturally wooded area. The purpose of this nature area is to accommodate a natural or park like setting with the installation of walking trails, benches, portable restroom facilities and such.

Ness Field Stadium – Projected Estimate: $200,000

Description: It has been proposed to construct a baseball stadium that would include approximately 200 stadium seats, handicapped accessibility to the stadium, a roof, a new press box, and improved landscaping.

Dickson Field Improvements – Projected Estimate: $5,000

Description: Plumbing upgrades need to be addressed so the concession area can be run properly.

Northshore Industrial Park – Preliminary Engineering and Layout – Projected Estimate: To Be Determined

Description: As part of the Northshore Redevelopment Master Plan, an Industrial Park will be developed to retain, grow and develop a new manufacturing base surrounding the Power Plant which will create industrial synergies with the potential conversion of the Power Plant. A preliminary engineering study is needed to determine the best physical layout of an Industrial Park surrounding the Power Plant to include the identification of needed infrastructure and proper sizing.

Willow Creek East Subdivision Paving and Curbing – Projected Estimate: To Be Determined

Description: The curbing and paving of this street will complete the Willow Creek East Phase 2 Subdivision.

Marvic Subdivision Paving and Curbing – Projected Estimate: To Be Determined

Description: The curbing and paving of 20th Avenue South and 21st Avenue South connected by South 19th Street of the Marvic Subdivision.

Restroom Upgrade - Municipal Dock – Project Estimate: $40,000

Description: The municipal dock bathrooms are in need of major renovations. This project will completely upgrade and redo the men's and women's bathroom.

Pier 3 Restroom Facility – Projected Estimate: $80,000

Description: The Marina is looking to build a 19' x 34' permanent structure bathroom south of pier 3. This bathroom would be useful to slip holders on the south end of the harbor as well as fishing tournaments.

L-Dock Reconstruction – Projected Estimate: To Be Determined

Description: The Marina will need to repair or demolish the existing L-dock structure as the first phase of dock replacement. If we chose to repair the existing L-dock, we would sheet pile, fill and resurface. Demolition of the L-dock would leave the new bridge as an attachment for a new pier two.

Public Works Cold Storage Building/Lean-To – Projected Estimate: $80,000

Description: This would be a 50' x 100' pole style building within the existing Department of Public Works fence. This building would also house the sign shop in conjunction with the building modification project. The project would also be done with Department of Public Works labor. Another option has been looked at for construction of a lean-to off the side of the building. A lean-to at 200' long and 24' wide. To cut the lean-to size in half would be approximately half the cost.

Sheridan Road Improvement Program – 1300 block to 1700 block – Off-Street Parking Lot Installation – Projected Estimate: $102,000

Description: As part of the Comprehensive Plan, a strategy exists to improve the 1300 to 1700 blocks of Sheridan Road. The neighborhood has an ethnic heritage which will be capitalized on. The area has a defined neighborhood business district with well-maintained homes. Efforts to improve and demarcate the business district are being planned.

Lemerand/Ness Complex (Playground Facilities) – Projected Estimate: $30,000

Description: Because of the recreational use, and the area being the far southside major playground facility, improvements to equipment is needed for the health, safety and welfare of the citizens.

Escanaba Heritage Walking Tour – Projected Estimate: $15,000

Description: A Heritage Walking Tour of the downtown area and parts of the City of Escanaba celebrating historic building, homes, and landmarks will be developed.

Concrete Slabs for Royce and Webster Parks - Projected Estimate: $40,000 Each

Description: The Recreation Department is proposing to develop a designated area for cement slabs at the Webster and Royce Ice Rinks to utilize the area for year round use. With the proposed slabs, participants could use the area for inline skating in the summer months and for ice skating in the winter months (year around use).

18th Avenue South Athletic Complex Parking – Projected Estimate: To Be Determined

Description: With the continuing development of these fields and the strong fan interest, this has created a serious vehicle parking problem. We would like to provide a combined parking/roadway for these facilities to reduce traffic/pedestrian accident hazards. Paved parking will be installed in the 18th Avenue South Athletic Complex which will serve the Ness Baseball Field, Lemerand Park and Escanaba Public Schools Athletic Field.

Monument to Labor Project – Esky 150 Project – Projected Estimate: $20,000

Description: As part of the Escanaba Sesquicentennial, the history of labor is significant in the City of Escanaba. In the course of demolishing the former Department of Public Works Facility in the early 1990's, four historical reliefs were salvaged for inclusion into a public monument to labor in a public space at Rose Park.

Liberty Tree Project at Veteran's Memorial – Esky 150 Project – Projected Estimate: $20,000

Description: As part of the Escanaba Sesquicentennial, "A Liberty Tree" Victory Garden will be erected at Veteran's Park as a reminder of the liberty and freedoms, we as a City value.

RH. 1

CITY OF ESCANABA
SPECIAL LAND USE REPORT
CASE NO. PC-040915-01

REFERENCE: 2808 North 28th Street

DATE: March 31, 2015

PROPERTY OWNER/APPLICANT ADDRESS:

Patrick Barron Properties, LLC
2808 North 28th Street
Escanaba, MI 49829

TYPE OF REQUEST:

Special Land Use Permit. In accordance with Section 1403.1 Uses allowed by special land use permit of Escanaba's Zoning Ordinance, a public hearing for a Special Land Use Permit must be conducted prior to the use permit issuance.

CURRENT ZONING:

Industrial Park District (F-1)

ORDINANCE:

Ordinance No.1028 Escanaba Zoning Ordinance and Ordinance No. 1026, the Wireless Telecommunication Facilities Ordinance.

DESCRIPTION OF PROPOSED PROJECT:

Patrick Barron Properties, LLC is proposing to construct a 115' monopole communication tower and shelter facility at 2808 North 28th Street, Escanaba.

COMPLIANCE WITH DEVELOPMENT STANDARDS:

1. The proposed construction will be located on property which is zoned as an Industrial Park District (F-1). The use is a permitted use as a Special Land Use with Planning Commission approval as outlined in Section 1403.1.A

2. The proposed construction meets the standards of the City of Escanaba Wireless Telecommunications Facilities Ordinance.

3. The preliminary proposed construction site plan diagram complies with Chapter 18. Sketch Plan Standards, Section 1808 Sketch Plans Required and Section 1809 Sketch Plan Diagram Requirements.

4. In accordance with the requirements found in Chapter 18. Site Plan and Sketch Plan Standards, Section 1803 Site Plan Review, paragraph 1803.1.1.1. Pre-Application Conference, a staff meeting and review was conducted on March 9, 2015.

5. All fee and notification requirements of the Ordinance have been accommodated.

DUTIES OF THE PLANNING COMMISSION

The Planning Commission must hold a Public Hearing so as to facilitate public review and understanding of the proposed development.

The Planning Commission must approve or deny the site plan according to the standards and requirements of the Telecommunications Facilities Ordinance within 45 days of submission of said plan.

Should the Planning Commission reject the site plan, the property owner may appeal the decision to the Zoning Board of Appeals.

If a protest of the proposed special land use permit is presented to the Planning Commission at or before the public hearing date on the request and it is properly signed by the owners of at least twenty percent (20%) of the noticed area of land included in the request, excluding publicly owned land, or by owners of at least twenty percent (20%) of the area of and included within an area extending out at least one hundred (100) feet from any point on the boundary of land included in the request, excluding publicly owned land, then such request for special land use permit approval shall be passed only upon an affirmative vote of three-fourths of the members of the Planning Commission.

STAFF COMMENT, GENERAL PLAN GOALS AND CONDITIONS OF APPROVAL:

1. Staff is recommending approval of the site plan diagram for the following reasons:

   A. The proposed use is consistent with the Escanaba Telecommunication Facility Ordinance.
   B. The proposed use is allowable use under a special land use permit which is issued by the Planning Commission.

FISCAL IMPACT:

The construction value of the proposed facility is estimated to be $150,000

PUBLIC CONTACT:

Notice of Public Hearing was published in the Escanaba Daily Press Newspaper and meeting notices were mailed to the adjacent property owners of the project site.

The meeting agenda was posted on the City's official notice bulletin board and the City of Escanaba's website.

ALTERNATIVES:

Not applicable.

ENFORCEMENT HISTORY:

None.

OTHER CONSIDERATIONS:

None.

BACK UP INFORMATION:

1. Application for Zoning Land Use Approval
2. Assessor's Property Information Card
3. 300' radius property owner/tenant notification letter
4. 300' radius labels

NOTES/COMMENTS:

APPLICATION FOR ZONING LAND USE APPROVAL
CITY OF ESCANABA, ESCANABA, MI 49829

Paid ck #112
3/9/15 KD
$500

We, the undersigned, owner(s)/agent(s) of the following described property hereby apply to you for a Zoning Land Use Permit, with a plan drawn to scale, showing actual dimensions and shape of the lot, exact sizes and locations of existing buildings on the lot, and locations and dimensions of the proposed buildings or alterations. The property owner(s) shall verify any existing easement(s) and/or right-of-way(s). The applicant certifies the information submitted is accurate. The applicant states that he/she has the property owner's authority to execute this agreement and permit. The undersigned, owner(s)/agent(s) further understand and have received a Development Handbook for Site Plan Standards and Parking and Circulation requirements as found in Escanaba's Zoning Ordinance. **Any certificate issued upon a false statement of any fact which is material to the issuance hereof, shall be void. All questions must be answered.**

LEGAL DESCRIPTION OF PROPERTY: See Attached
ASSESSOR #: 051-325-2813-201-006

LOT INFORMATION:
PROPERTY OWNER(S): Pat Barron
PHONE NUMBER: 907-786-0645 **E-MAIL ADDRESS:**
PROPERTY ADDRESS: N 28th St Escanaba MI 49829 (2808)
TYPE OF LOT: (circle one) *Corner Lot* *Interior Lot* *Other:*
*Please note the dimensions on your site plan as well
SIZE OF LOT: **LENGTH OF LOT:** 467 **WIDTH OF LOT:** 275
IRREGULAR LOT: YES **PROPERTY ZONED:** Manufacturing

****

BUILDING INFORMATION:
TYPE OF BUILDING: (check one)
☐ *Multi-family building containing 5 or more dwelling units*
☐ *A building conversion from a commercial use to any other use on Ludington Street between Lincoln Road and 2nd Street*
☐ *A principal nonresidential building or structures permitted in a residential district*
☒ *A communication tower*
☐ *A commercial building 5,000 square feet or more in size*
☐ *A Residential Planned-Unit Development*
☐ *Planned Commercial Development*
☐ *Change of Use: FROM* _____ *TO* _____
☐ *Industrial building and/or use*
☐ *Special Land Use Permit Request*
☐ *Special Planned District Development*
☐ *Other:*
SIZE OF BUILDING: **EXISTING FLOOR AREA:**
PROPOSED PERCENTAGE OF LOT COVERED BY STRUCTURE(S)
PROPOSED USE: Communication Tower & Equipment Shelter
 # OF STORIES: **HEIGHT OF BUILDING:** (feet and stories)
ROOF TYPE: (circle one) *Gambrel* *Mansard* *Flat* *Gable* *Hip*
SETBACKS: (from property line) **FRONT:** **SIDES:** and **REAR:**
IS THE PROPERTY IN A 100 YEAR FLOOD PLAIN? NO X YES ____ **PANEL #** ____ **PANEL DATE** ____
ESTIMATED VALUE OF CONSTRUCTION: $150,000
APPROVED VARIANCES:

****

I certify that the information contained herein is true and accurate: (Please print)
COMPANY NAME/APPLICANT: SBA/Verizon **DATE:**
SUBMITTED BY: Greg Steinhart
SIGNATURE: **PHONE:**

****

OFFICE USE ONLY:
DATE RECEIVED: 3/9/15 **APPROVED:** **DISAPPROVED:**
IF APPLICATION IS DENIED, REASON FOR DENIAL:

SPECIAL REQUIREMENTS OF APPROVAL:

SIGNATURE OF REVIEWER: **DATE:**

F:\guest\jim'sforms\zoninginformation\applicationforzoninglanduseapproval

Parcel Number: 051-325-2813-201-006 Jurisdiction: City of Escanaba County: Delta Printed on 12/12/2014

Grantor	Grantee	Sale Price	Sale Date	Inst. Type	Terms of Sale	Liber & Page	Verified By	Prcnt. Trans.
BARRON PATRICK	P BARRON PROPERTIES LLC	0	10/09/2014	QCD	AFFILIATED GROUPS	1116/088	DAINA NORDEN	0.0
A M EXPRESS INC	P BARRON PROPERTIES LLC	0	05/20/2010	QCD	AFFILIATED GROUPS	986/247	DAINA NORDEN	0.0
A M EXPRESS INC/CITY OF E	BARRON PATRICK	21,400	02/12/2001	LC	LAND CONTRACT	586/730	DAINA NORDEN	0.0
	A M EXPRESS	13,725	10/07/1998	LC	LC	516/765		0.0

Property Address
2808 NORTH 28TH STREET

Class: Commercial, 201 Zoning:
School: Escanaba Schools 21010
P.R.E. 0%
Map #:
2015 Est TCV Tentative

Building Permit(s)	Date	Number	Status

Owner's Name/Address
P BARRON PROPERTIES LLC
5212 S KURTH 17.75 DR
ESCANABA MI 49829

X Improved | Vacant

Land Value Estimates for Land Table 93.COMM OFF MAIN

Description	Frontage	Depth	Front	Depth	Rate	%Adj.	Reason	Value
			* Factors *				275 X 445	
	275.00	445.00	1.0000	1.0000	300	100	275 X 445	82,500
275 Actual Front Feet, 2.81 Total Acres					Total Est. Land Value =			82,500

Land Improvement Cost Estimates

Description	Rate	CountyMult.	Size	%Good	Cash Value
D/W/P: Crushed Rock	1.22	1.32	120000	4	7,730
Total Estimated Land Improvements True Cash Value =					7,730

Tax Description
LOT 10 OF THE RED PINES INDUSTRIAL PARK SUBDIVISION NO. 1

Comments/Influences

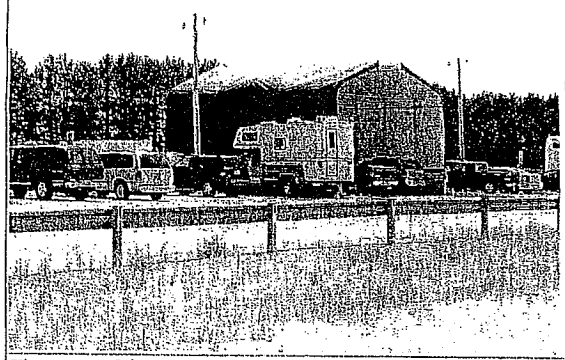

The Equalizer. Copyright (c) 1999 - 2009. Licensed To: City of Escanaba, County of Delta, Michigan

	Public Improvements
	Dirt Road
	Gravel Road
X	Paved Road
X	Storm Sewer
	Sidewalk
X	Water
X	Sewer
X	Electric
X	Gas
	Curb
	Street Lights
	Standard Utilities
	Underground Utils.

	Topography of Site
X	Level
	Rolling
	Low
X	High
	Landscaped
	Swamp
	Wooded
	Pond
	Waterfront
	Ravine
	Wetland
	Flood Plain

Who	When	What
TW	10/30/2014	Data Enter
KD	08/15/2011	Inspected
KD	02/06/2010	Data Enter

Year	Land Value	Building Value	Assessed Value	Board of Review	Tribunal/ Other	Taxable Value
2015	Tentative	Tentative	Tentative			Tentative
2014	41,250	3,572	44,822			15,208C
2013	41,250	3,455	44,705			14,969C
2012	41,250	2,924	44,174			14,619C

*** Information herein deemed reliable but not guaranteed***

Desc. of Bldg/Section: VACANT
Calculator Occupancy: Apartment

Class: D,Siding
Floor Area
Gross Bldg Area
Stories Above Grd
Average Sty Hght
Bsmnt Wall Hght

Depr. Table : 1.75%
Effective Age : 2
Physical %Good: 96
Func. %Good : 100
Economic %Good: 100

Year Built
Remodeled

Overall Bldg
Height

Comments:

Construction Cost

High		Above Ave.	X	Ave.		Low

** ** Calculator Cost Data ** **
Quality: Average Adj: %+0 $/SqFt:0.00
Heat#1: Zoned A.C. Warm & Cooled Air 100
Heat#2: Electric, Cable or Baseboard 0%
Ave. SqFt/Story
Ave. Perimeter
Has Elevators:

*** Basement Info ***
Area:
Perimeter:
Type: Finished/Office
Heat:

* Mezzanine Info *
Area #1:
Type #1: Office (No Rates)
Area #2:
Type #2: Office (No Rates)

* Sprinkler Info *
Area:
Type: Average

<<<<< Calculator Cost Computations >>>>>
Class: D,Siding Quality: Average Percent Adj: +0

Base Rate for Upper Floors = 59.15

(10) Heating system: Zoned A.C. Warm & Cooled Air Cost/SqFt: 5.20 100%
Elevator Adjustment (Applied to upper floors rate) Cost/Sq.Ft.: -1.90
Adjusted Square Foot Cost for Upper Floors = 62.45

0 Stories Number of Stories Multiplier: 1.000
Average Height per Story: 0 Height per Story Multiplier: 0.950
Ave. Floor Area: 0 Perimeter: 0 Perim. Multiplier: 1.000
Refined Square Foot Cost for Upper Floors: 59.33

County Multiplier: 1.32, Final Square Foot Cost for Upper Floors = 78.312

Total Floor Area: 0 Base Cost New of Upper Floors = 0

Reproduction/Replacement Cost = 0
Eff.Age:2 Phy.%Good/Abnr.Phy./Func./Econ./Overall %Good: 96 /100/100/100/96.0
Total Depreciated Cost = 0

(1) Excavation/Site Prep:

(2) Foundation: | Footings
X Poured Conc | Brick/Stone | Block

(3) Frame:

(4) Floor Structure:

(5) Floor Cover:

(6) Ceiling:

(7) Interior:

(8) Plumbing:

	Many Above Ave.		Average Typical		Few None

	Total Fixtures		Urinals
	3-Piece Baths		Wash Bowls
	2-Piece Baths		Water Heaters
	Shower Stalls		Wash Fountains
	Toilets		Water Softeners

(9) Sprinklers:

(10) Heating and Cooling:

X	Gas Oil		Coal Stoker		Hand Fired Boiler

(11) Electric and Lighting:

Outlets:		Fixtures:
X Few	X	Few
Average		Average
Many		Many
Unfinished		Unfinished
Typical		Typical
Flex Conduit		Incandescent
Rigid Conduit		Fluorescent
Armored Cable		Mercury
Non-Metalic		Sodium Vapor
Bus Duct		Transformer

(13) Roof Structure: Slope=0

(14) Roof Cover:

(39) Miscellaneous:

(40) Exterior Wall:

	Thickness		Bsmnt Insul.

*** Information herein deemed reliable but not guaranteed***

CITY OF Escanaba

P.O. Box 948 • Escanaba, MI 49829-0948 • (906) 786-0240 • fax (906) 786-4755
TDD (800) 649-3777

CITY OF ESCANABA
PLANNING COMMISSION

At a meeting of the Escanaba Planning Commission scheduled for April 9, 2015, at 6:00 p.m. at the Escanaba City Hall/Library Complex, Room C101 Council Chambers, 410 Ludington Street, Escanaba, MI 49829, a public hearing will be conducted on the following:

Special Land Use Permit – Patrick Barron Properties, LLC – 2808 North 28th Street - Communication Tower and Equipment Shelter

Patrick Barron Properties, LLC is proposing to construct a 115' monopole communication tower and shelter facility at 2808 North 28th Street, Escanaba.

You are cordially invited to attend this meeting should you have any comments concerning any of the agenda items. If you have comments, but are unable to attend this meeting, please submit your written concerns to the City of Escanaba, P.O. Box 948, 410 Ludington Street, Escanaba, MI 49829, prior to April 9, 2015. All written correspondence will be entered into the public record.

Patrick Connor, Chairperson
Escanaba Planning Commission

CITY OF Escanaba

P.O. Box 948 • Escanaba, MI 49829-0948 • (906) 786-0240 • fax (906) 786-4755
TDD (800) 649-3777

March 17, 2015

ESCANABA PLANNING COMMISSION
ESCANABA MICHIGAN 49829

Dear Property Owner/Occupant:

A scheduled meeting of the Escanaba Planning Commission has been scheduled for April 9, 2015, at 6:00 p.m. at the City Hall/Library Complex, Room C101 Council Chambers, 410 Ludington Street, Escanaba, MI 49829. The following item will be on the agenda:

Special Land Use Permit – Patrick Barron Properties, LLC – 2808 North 28th Street - Communication Tower and Equipment Shelter

Patrick Barron Properties, LLC is proposing to construct a 115' monopole communication tower and shelter facility at 2808 North 28th Street, Escanaba.

You are cordially invited to attend this meeting should you have any comments concerning this project. If you have comments, but are unable to attend this meeting, please submit your written comments to the City of Escanaba Planning Commission prior to April 9, 2015. All written and signed comments will be read into the public record.

The City of Escanaba will provide all necessary, reasonable aids and services, such as signers for the hearing impaired and audio tapes of printed materials being considered at the meeting to individuals with disabilities at the meeting/hearing upon five (5) days notice to the City of Escanaba. Individuals with disabilities requiring auxiliary aids or services should contact the City of Escanaba by writing or calling the City of Escanaba at (906) 786-9402. A copy of the proposed site plan for the referenced project can be viewed at City Hall, Second Floor, 410 Ludington Street, Escanaba, MI, Monday through Friday, 7:30 a.m. to 4:00 p.m.

Sincerely,

Patrick Connor, Chairperson
Escanaba Planning Commission

PROOF OF SERVICE — MAILING
This document was enclosed in sealed envelope, first class postage fully prepaid, and deposited in the U.S. Government Mail.
Addressee (s): Property owner/tenant w/o
300 of proposed project
Mailing Date: 3/17/15
Attested To By: KP

LEGEND

- EXISTING POWER POLE
- ELECTRIC METER
- TELEPHONE PEDESTAL
- FIBER OPTIC VAULT
- LIGHT POLE
- METAL POST
- WOOD POST
- MANHOLE
- WATER VALVE
- FIRE HYDRANT
- —OHE— OVERHEAD ELECTRIC
- —F— BURIED FIBER OPTIC
- —W— WATER MAIN
- PROPERTY LINE

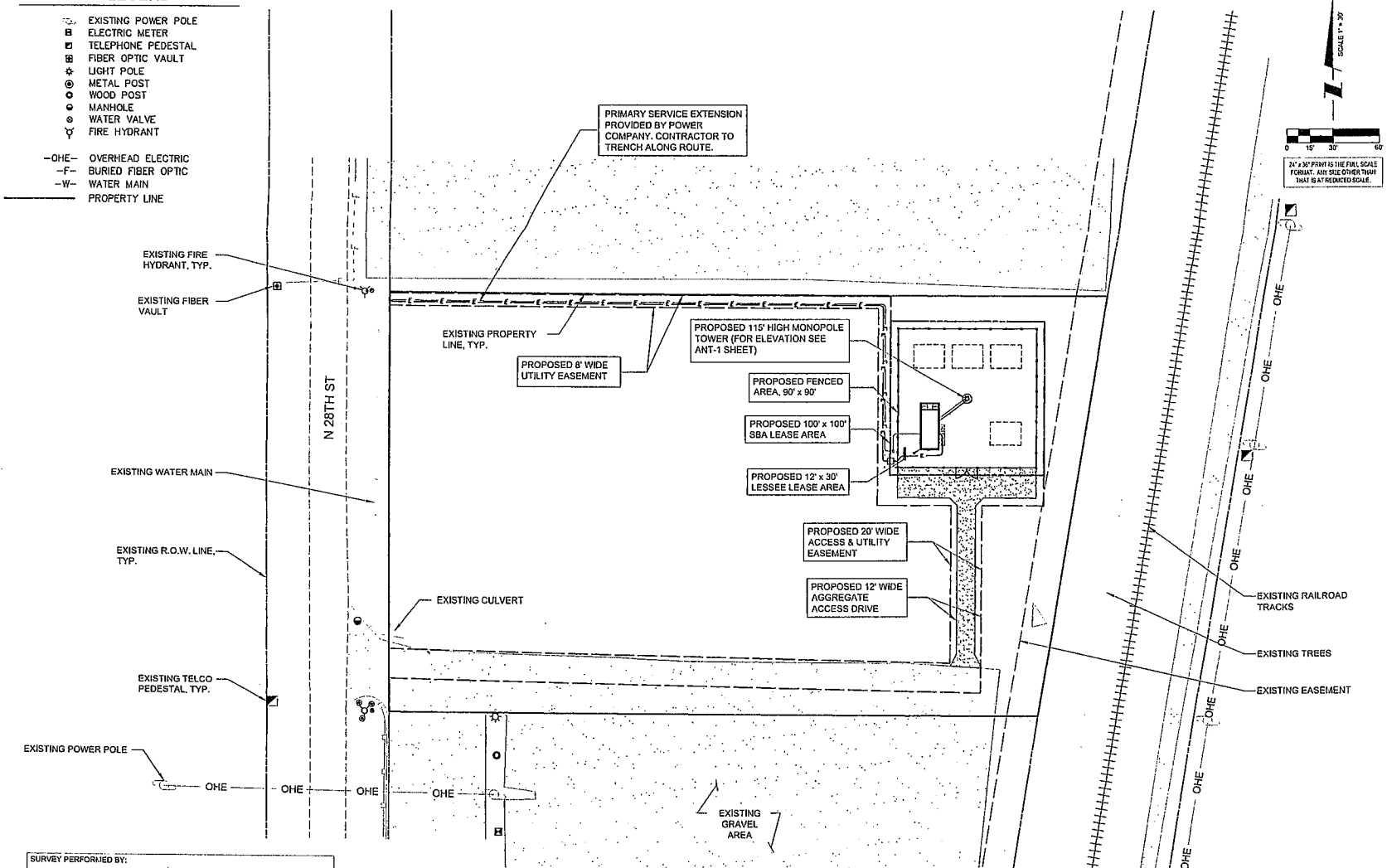

SURVEY PERFORMED BY:

MERIDIAN SURVEYING, LLC
N8774 Firelane 1
Menasha, WI 54952
Office: 920-993-0831
Fax: 920-273-6037

SITE BENCHMARK:
TOP OF TAG BOLT ON FIRE HYDRANT
ELEVATION: 630.13'

3 WORKING DAYS
BEFORE YOU DIG
CALL MISS DIG
1-800-482-7171

SBA
5500 BROKEN SOUND BLVD NW
BOCA RATON, FL 33487
PHONE 1-800-87-7483

TERRA CONSULTING GROUP, LTD.
600 Busse Highway
Park Ridge, IL 60068
Ph: 847/698-6400
Fax: 847/698-6401

REVISIONS

NO.	DESCRIPTION	DATE
-	ISSUED FOR REVIEW/PERMIT	01/20/15

SITE 301513

SBA # MI16549-B

WELLS 3

N 28TH ST
ESCANABA, MI 49829

DRAWN BY:	BTE
CHECKED BY:	TAZ
DATE:	01/20/15
PROJECT #:	7505

SHEET TITLE
LOCATION PLAN

SHEET NUMBER -
LP

Easy Peel® Labels
Use Avery® Template 5160®

Feed Paper

Bend along line to
expose Pop-up Edge™

AVERY® 5160®

BOSK PROPERTIES
P O BOX 461
ESCANABA, MI 49829

NORTHERN MICHIGAN HOLDINGS LLC
2711 NORTH LINCOLN ROAD
ESCANABA, MI 49829

SWANSON STEVEN ETAL
6569 M ROAD
ESCANABA, MI 49829

MCCALL JEFF
2701 NORTH LINCOLN ROAD
ESCANABA, MI 49829

BARRON P & D & I
BARRON P PROPERTIES LLC
5212 SOUTH KURTH 17.75 DR
ESCANABA, MI 49829

MARVIC PAULA A TRUST
% SUE HURLEY
5457 PORTAGE POINT ROAD
ESCANABA, MI 49829

P BARRON PROPERTIES LLC
5212 S KURTH 17.75 DR
ESCANABA, MI 49829

BARRON P & D & I
BARRON P PROPERTIES LLC
5212 SOUTH KURTH 17.75 DR
ESCANABA, MI 49829

P BARRON PROPERTIES LLC
5212 S KURTH 17.75 DR
ESCANABA, MI 49829

PENINSULA MOOSE LLC
23972 COUNTY RD 98
MC MILLAN, MI 49853

NORTHERN MICHIGAN BANK & TRUST
723 LUDINGTON STREET
ESCANABA, MI 49829

BOSK PROPERTIES I LLC
P O BOX 461
ESCANABA, MI 49829

NORTHERN MICHIGAN BANK & TRUST
723 LUDINGTON STREET
ESCANABA, MI 49829

Étiquettes faciles à peler
Utilisez le gabarit AVERY® 5160®

Sens de

Repliez à la hachure afin de
révéler le rebord Pop-up™

www.avery.com
1-800-GO-AVERY

CITY OF ESCANABA PLANNING COMMISSION

At a meeting of the Escanaba Planning Commission scheduled for April 9, 2015 at 6:00 p.m. at the Escanaba City Hall/Library Complex, Room C101 Council Chambers, 410 Ludington Street, Escanaba MI 49829, a public will hearing will be conducted on the following:

Special Land Use Permit - Patrick Barron Properties, LLC - 2808 North 28th Street - Communication Tower and Equipment Shelter

Patrick Barron Properties, LLC is proposing to construct a 115' monopole communication tower and shelter facility at 2808 North 28th Street, Escanaba.

You are cordially invited to attend this meeting should you have any comments concerning any of the agenda items. If you have comments, but are unable to attend this meeting, please submit your written concerns to the City of Escanaba, P.O. Box 948, 410 Ludington Street, Escanaba, MI 49829, prior to April 9, 2015. All written correspondence will be entered into the public record.

Patrick Connor, Chairperson
Escanaba Planning Commission

3/19/15

SBA

SBA TOWERS VI LLC
5900 BROKEN SOUND PKWY NW
BOCA RATON, FL 33487
PHONE: 1-800-487-7483

SITE NUMBER: MI16549-B

SITE NAME: WELLS 3

E911 ADDRESS: T.B.D.

PROPOSED 115' MONOPOLE TOWER
WITH COMMUNICATION EQUIPMENT

VERIZON WIRELESS PERSONAL COMMUNICATION LP

d/b/a VERIZON WIRELESS

LOCATION NUMBER: 301513
SITE NAME: DANFORTH

VICINITY MAP

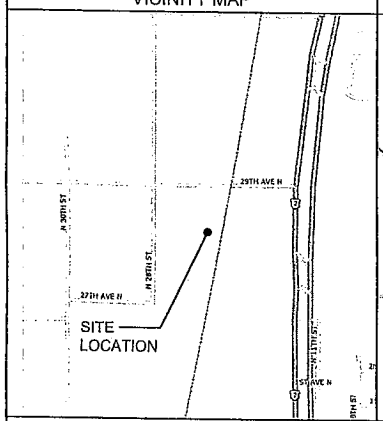

REGIONAL MAP

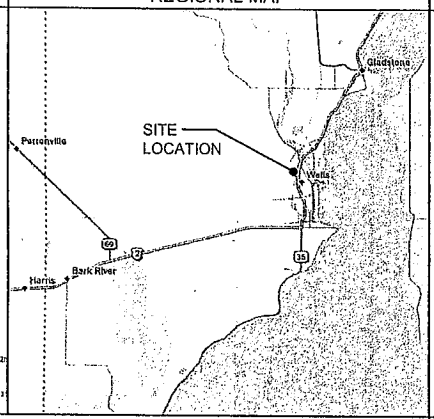

PROJECT INFORMATION

SITE NUMBER:	MI16549-B
SITE NAME:	WELLS 3
SITE ADDRESS:	N 28TH ST ESCANABA, MI 49829
COUNTY:	DELTA
LAND OWNER	PATRICK BARRON 5212 KURTH 17.75 DR. ESCANABA, MI 49829 907-786-0645
APPLICANT:	SBA TOWERS VI, LLC 5900 BROKEN SOUND PKWY NW BOCA RATON, FL 33487
CONTACT PERSON:	LAURA HALPENNY (630) 802-2357
LATITUDE:	45° 46' 53.59" N (FROM 1A)
LONGITUDE:	87° 05' 09.53" W (FROM 1A)
LAT/LONG TYPE:	DEGREES MINUTES AND SECONDS
GROUND ELEVATION:	630.8' AMSL
CURRENT ZONING:	INDUSTRIAL
PARCEL No.:	051-325-2813-201-006

SHEET INDEX

SHEET	DESCRIPTION	REVISION
T-1	TITLE SHEET	1.
LP	LOCATION PLAN	-
C-1	SITE PLAN	-
C-2,A	SITE GRADING PLANS	-
C-3	SITE DETAILS & SPECIFICATIONS	-
C-4	FENCE DETAILS	-
C-5	FENCE DETAILS	-
C-6	EQUIPMENT ENCLOSURE FOUNDATION PLAN	-
ANT-1	SITE ELEVATION	1.
ANT-2	ANTENNA INFORMATION	1.
ANT-3	ANTENNA MOUNTING DETAILS	-
ANT-4	ANTENNA MOUNTING DETAILS	-
B-1	EQUIPMENT ENCLOSURE DETAILS	-
B-2	EQUIPMENT ENCLOSURE ELEVATIONS	-
E-1	UTILITY ROUTING PLAN	-
E-2	SITE GROUNDING PLAN	-
E-3	UTILITY DETAILS	-
E-4	SINGLE LINE DIAGRAM & PANEL SCHEDULE	-
E-5	ELECTRICAL AND GROUNDING DETAILS	-
E-6	ELECTRICAL AND GROUNDING DETAILS	-
E-7	LESSEE GROUNDING DETAILS	-
N-1	GENERAL NOTES	-

SURVEY ATTACHMENTS

1 OF 3	SITE SURVEY	-
2 OF 3	SITE SURVEY	-
3 OF 3	SITE SURVEY	-

UTILITY CONTACT INFORMATION

POWER: T.B.D.

FIBER: T.B.D.

NOTE: UTILITY COORDINATION IS NOT FINALIZED. DO NOT PROCEED WITH CONSTRUCTION UNTIL POWER / TELCO / FIBER HAVE BEEN CONFIRMED.

3 WORKING DAYS BEFORE YOU DIG CALL MISS DIG 1-800-482-7171

DRIVING DIRECTIONS

FROM LESSEE OFFICE IN SCHAUMBURG, IL:
TURN LEFT ONTO E FRONTAGE RD (0.1 MI). TAKE RAMP LEFT AND FOLLOW SIGNS FOR IL-53 NORTH (0.9 MI). KEEP STRAIGHT ONTO IL-53 N (6.0 MI). KEEP STRAIGHT ONTO IL-53 N EXT (1.3 MI). TAKE RAMP RIGHT AND FOLLOW SIGNS FOR EAST LAKE COOK RD (0.3 MI). KEEP STRAIGHT ONTO LAKE COOK RD / CR-A50 (7.3 MI). TAKE RAMP LEFT FOR I-94 WEST (0.6 MI). KEEP STRAIGHT ONTO I-94 W (182.4 mi). AT EXIT 192A, TAKE RAMP RIGHT FOR US-41 NORTH / US-141 NORTH TOWARD MARINETTE (15.8 MI). KEEP RIGHT ONTO US-41 N (37.6 MI). BEAR RIGHT ONTO M-35 / N SHORE DR (52.3 MI). KEEP STRAIGHT ONTO US-2 / US-41 / M-35 / N LINCOLN RD (2.8 MI). TURN BACK ON US-2 W / US-41 S / M-35 S (0.2 MI). TURN RIGHT ONTO 29TH AVE N (0.2 MI). TURN LEFT ONTO N 28TH ST; DESTINATION IS ON THE LEFT.

SPECIAL NOTES

HANDICAPPED REQUIREMENTS :
FACILITY IS UNMANNED AND NOT FOR HUMAN HABITATION
HANDICAPPED ACCESS REQUIREMENTS NOT REQUIRED

PLUMBING REQUIREMENTS :
FACILITY HAS NO PLUMBING

SBA
SBA TOWERS VI, LLC
5900 BROKEN SOUND PKWY NW
BOCA RATON, FL 33487
PHONE 1-800-487-7483

TERRA CONSULTING GROUP, LTD.
600 Busse Highway
Park Ridge, IL 60068
Ph: 847/696-6400
Fax: 847/696-6401

REVISIONS

NO.	DESCRIPTION	DATE
1.	ISSUED FOR REVIEW/DRAFT	11/12/14
	UPDATE WITH EER	2/16/15

SITE 301513

SBA # MI16549-B

WELLS 3

2842 N 28TH ST
ESCANABA, MI 49829

DRAWN BY:	BTE
CHECKED BY:	TAZ
DATE:	11/12/14
PROJECT #:	7505

SHEET TITLE
TITLE SHEET

SHEET NUMBER
T-1

LEGEND

- EXISTING POWER POLE
- ELECTRIC METER
- TELEPHONE PEDESTAL
- FIBER OPTIC VAULT
- LIGHT POLE
- METAL POST
- WOOD POST
- MANHOLE
- WATER VALVE
- FIRE HYDRANT
- —OHE— OVERHEAD ELECTRIC
- —F— BURIED FIBER OPTIC
- —W— WATER MAIN
- PROPERTY LINE

EXISTING FIRE HYDRANT, TYP.

EXISTING FIBER VAULT

EXISTING WATER MAIN

EXISTING R.O.W. LINE, TYP.

EXISTING TELCO PEDESTAL, TYP.

EXISTING POWER POLE

N 28TH ST

OHE

PRIMARY SERVICE EXTENSION PROVIDED BY POWER COMPANY. CONTRACTOR TO TRENCH ALONG ROUTE.

EXISTING PROPERTY LINE, TYP.

PROPOSED 8' WIDE UTILITY EASEMENT

PROPOSED 115' HIGH MONOPOLE TOWER (FOR ELEVATION SEE ANT-1 SHEET)

PROPOSED FENCED AREA, 90' x 90'

PROPOSED 100' x 100' SBA LEASE AREA

PROPOSED 12' x 30' LESSEE LEASE AREA

PROPOSED 20' WIDE ACCESS & UTILITY EASEMENT

PROPOSED 12' WIDE AGGREGATE ACCESS DRIVE

EXISTING CULVERT

EXISTING GRAVEL AREA

EXISTING RAILROAD TRACKS

EXISTING TREES

EXISTING EASEMENT

SCALE 1" = 30'

0 15' 30' 60'

24" x 36" PRINT IS THE FULL SCALE FORMAT. ANY SIZE OTHER THAN THAT IS AT REDUCED SCALE.

SURVEY PERFORMED BY:

MERIDIAN SURVEYING, LLC

SITE BENCHMARK:
TOP OF TAG BOLT ON FIRE HYDRANT
ELEVATION: 630.13'

BEFORE YOU DIG CALL MISS DIG
1-800-482-7171

SBA

TERRA CONSULTING GROUP, LTD.
600 Busse Highway
Bartlett, IL 60103
Ph: 847/698-6400
Fax: 847/698-6401

REVISIONS		
NO.	DESCRIPTION	DATE
1	ISSUED FOR REVIEW/PERMIT	01/26/15

SITE 301513

SBA # MI16549-B

WELLS 3

N 28TH ST
ESCANABA, MI 49829

DRAWN BY	BTG
CHECKED BY	TAZ
DATE	01/26/15
PROJECT #	7505

SHEET TITLE

LOCATION PLAN

SHEET NUMBER

LP

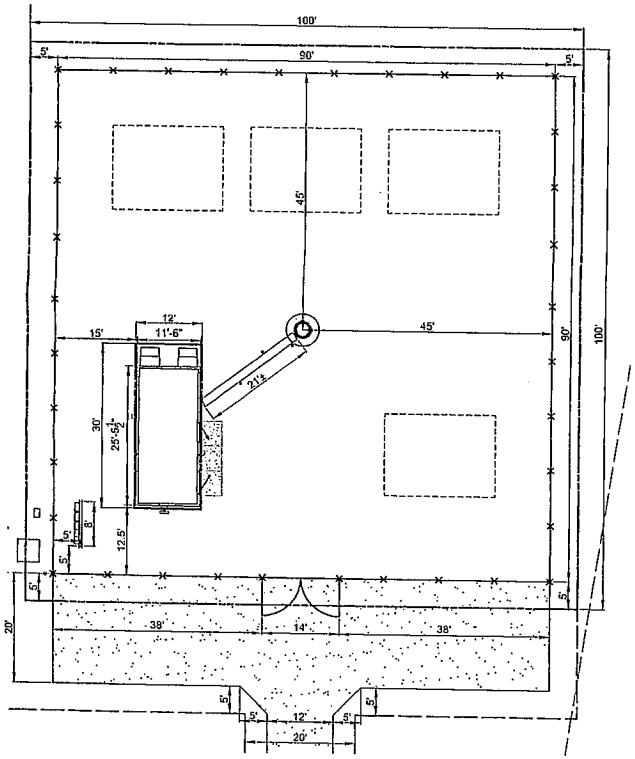

SITE DIMENSION PLAN

SURVEY PERFORMED BY:

MERIDIAN SURVEYING, LLC
N5774 Firelane 1
Menominee, WI 54952
Office 920-993-0851
Fax: 920-273-6037

SITE BENCHMARK:
TOP OF TAG BOLT ON FIRE HYDRANT
ELEVATION: 630.13'

PAVEMENT MATERIALS AND QUANTITIES

ACCESS ROAD 359 S.Y.

6" OF 3 4" CRUSHED AGGREGATE WITH FINES.
6" OF SUB-GRADE AGGREGATE
2600 GRADE SUB-GRADE GEOTEXTILE FABRIC, WOVEN

LEASE SITE 900 S.Y.

5" AGGREGATE BASE COURSE (CRUSHED RUN) (TOP)
3" #57 WASHED STONE (BOTTOM)
6 MIL. MIRAFI 500 WEED CONTROL FABRIC
300 L.F. OF FENCING

THE CONTRACTOR ALSO SHALL INCLUDE A SEPARATE UNIT PRICE PER CUBIC YARD TO REMOVE UNSTABLE OR UNSUITABLE MATERIAL AND HAUL IN GRANULAR BACKFILL UNDER THE ACCESS DRIVE AND OR APRON.

3 WORKING DAYS
BEFORE YOU DIG
CALL MISS DIG
1-800-482-7171

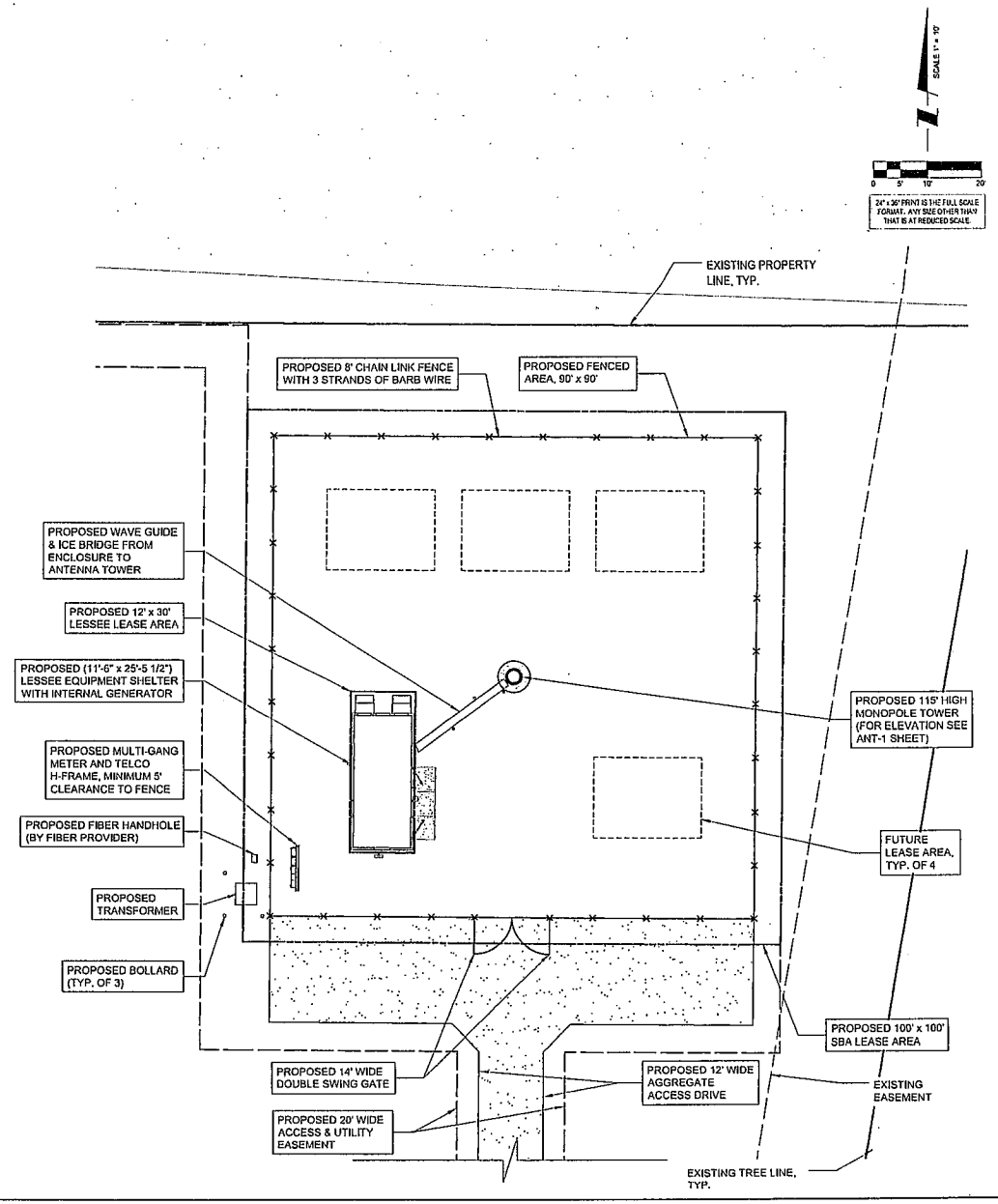

SBA
SBA TOWERS V, LLC
5900 BROKEN SOUND PKWY NW
BOCA RATON, FL 33487
PHONE: 1-800-487-7483

TERRA CONSULTING GROUP, LTD.
600 Busse Highway
Park Ridge, IL 60068
Ph: 847/698-5400
Fax: 847/698-5401

REVISIONS

NO.	DESCRIPTION	DATE
-	ISSUED FOR REVIEW/PERMIT	04/20/15

SITE 301513

SBA # MI16549-B

WELLS 3

N 28TH ST
ESCANABA, MI 49829

DRAWN BY:	DTE
CHECKED BY:	TAZ
DATE:	04/20/15
PROJECT #:	7595

SHEET TITLE
ENGINEERING SITE PLAN

SHEET NUMBER
C-1

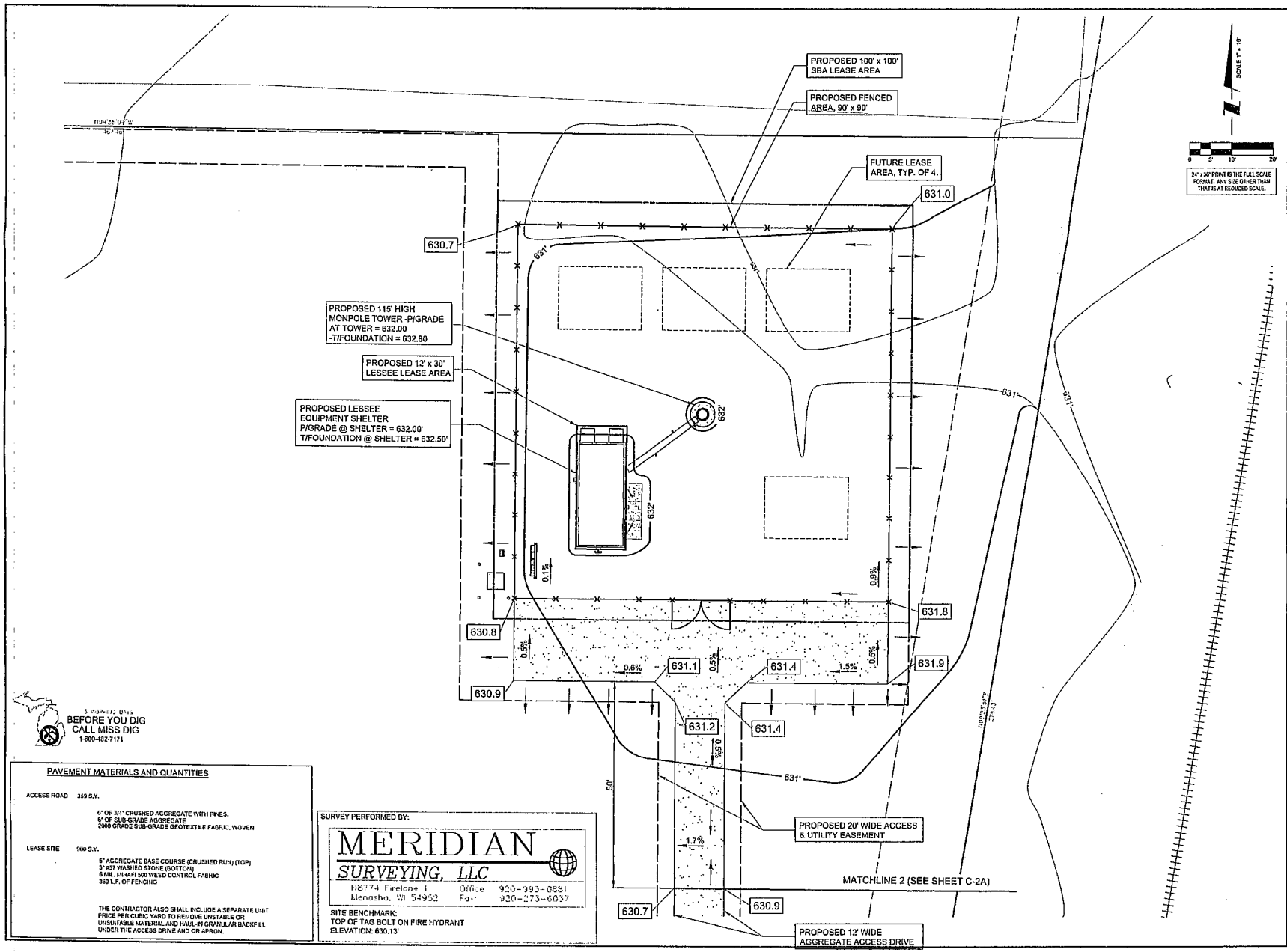

PAVEMENT MATERIALS AND QUANTITIES

ACCESS ROAD 359 S.Y.

6" OF 3/4" CRUSHED AGGREGATE WITH FINES.
9" OF SUB-GRADE AGGREGATE
2000 GRADE SUB-GRADE GEOTEXTILE FABRIC, WOVEN

LEASE SITE 900 S.Y.

5" AGGREGATE BASE COURSE (CRUSHED RUN) (TOP)
3" #57 WASHED STONE (BOTTOM)
6 MIL. MIRAFI 500 WEED CONTROL FABRIC
360 L.F. OF FENCING

THE CONTRACTOR ALSO SHALL INCLUDE A SEPARATE UNIT PRICE PER CUBIC YARD TO REMOVE UNSTABLE OR UNSUITABLE MATERIAL AND HAUL IN GRANULAR BACKFILL UNDER THE ACCESS DRIVE AND OR APRON.

SURVEY PERFORMED BY:

MERIDIAN SURVEYING, LLC
N8774 Firelane 1
Menasha, WI 54952
Office 920-993-0881
Fax 920-273-6037

SITE BENCHMARK:
TOP OF TAG BOLT ON FIRE HYDRANT
ELEVATION: 630.13'

SBA
SBA TOWERS, LLC
5900 BROKEN SOUND PKWY NW
BOCA RATON, FL 33487
PHONE: 1-800-487-7483

TERRA CONSULTING GROUP, LTD.
600 Busse Highway
Park Ridge, IL 60068
Ph: 847/698-6400
Fax: 847/698-6401

REVISIONS		
NO.	DESCRIPTION	DATE
-	ISSUED FOR REVIEW/PERMIT	01/20/15

SITE 301513

SBA # MI16549-B

WELLS 3

N 28TH ST
ESCANABA, MI 49829

DRAWN BY:	BTE
CHECKED BY:	TAZ
DATE:	01/20/15
PROJECT #:	7555

SHEET TITLE
SITE GRADING PLAN

SHEET NUMBER
C-2

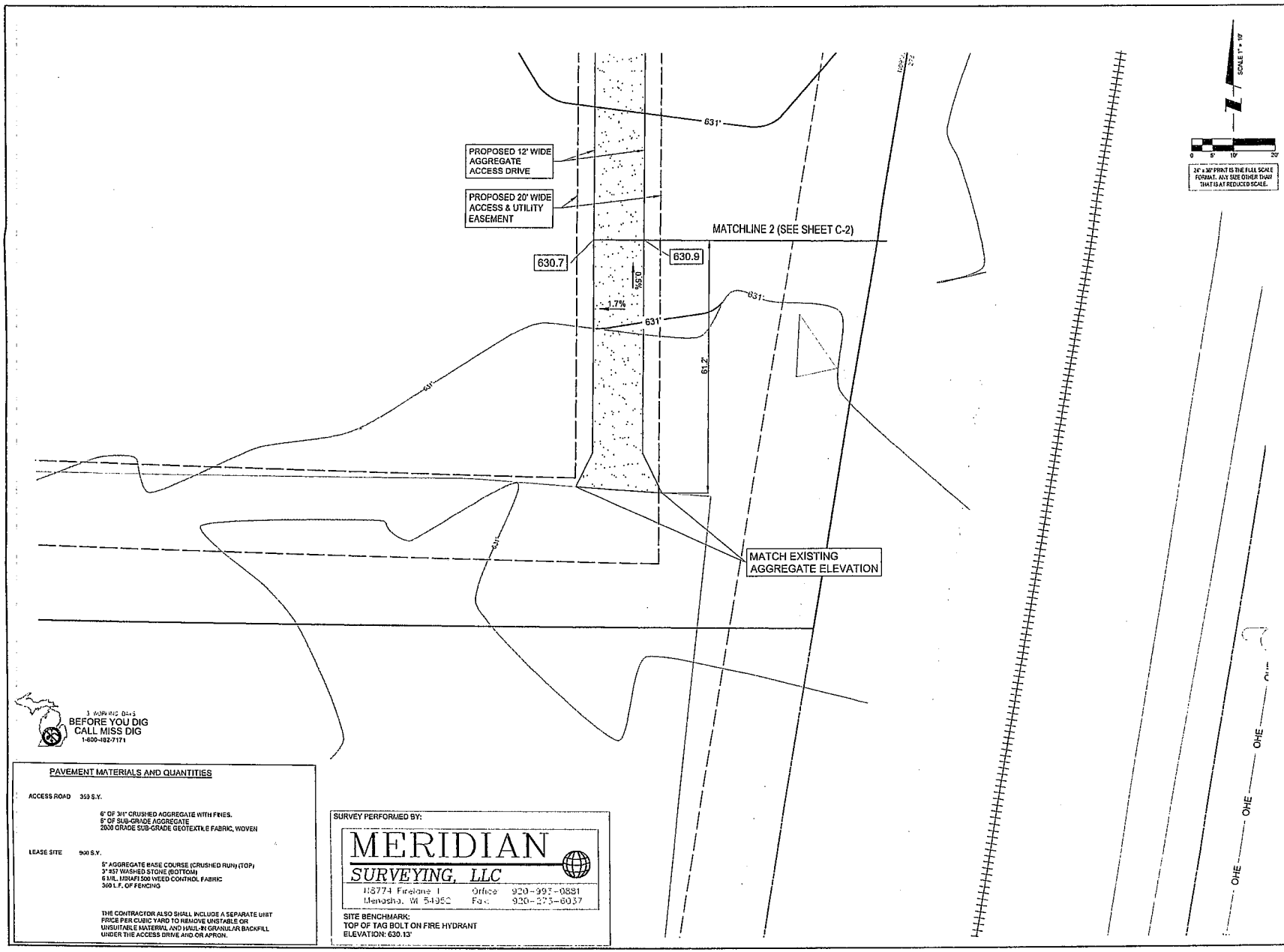

PAVEMENT MATERIALS AND QUANTITIES

ACCESS ROAD 350 S.Y.

6" OF 3/4" CRUSHED AGGREGATE WITH FINES.
6" OF SUB-GRADE AGGREGATE
2000 GRADE SUB-GRADE GEOTEXTILE FABRIC, WOVEN

LEASE SITE 900 S.Y.

5" AGGREGATE BASE COURSE (CRUSHED RUN) (TOP)
3" #57 WASHED STONE (BOTTOM)
6 MIL. MIRAFI 500 WEED CONTROL FABRIC
360 L.F. OF FENCING

THE CONTRACTOR ALSO SHALL INCLUDE A SEPARATE UNIT PRICE PER CUBIC YARD TO REMOVE UNSTABLE OR UNSUITABLE MATERIAL AND HAUL-IN GRANULAR BACKFILL UNDER THE ACCESS DRIVE AND/OR APRON.

SURVEY PERFORMED BY:

MERIDIAN SURVEYING, LLC
N8774 Firelane 1 Office 920-993-0881
Menasha, WI 54952 Fax 920-273-6037

SITE BENCHMARK:
TOP OF TAG BOLT ON FIRE HYDRANT
ELEVATION: 630.13'

SBA
SBA TOWERS V, LLC
5900 BROKEN SOUND PKWY NW
BOCA RATON, FL 33487
PHONE 1-800-487-7483

TERRA CONSULTING GROUP, LTD.
600 Busse Highway
Park Ridge, IL 60068
Ph: 847/698-6400
Fax: 847/698-6401

REVISIONS

NO.	DESCRIPTION	DATE
-	ISSUED FOR REVIEW/PERMIT	01/26/15

SITE 301513

SBA # MI16549-B

WELLS 3

N 28TH ST
ESCANABA, MI 49829

DRAWN BY:	DTE
CHECKED BY:	TAZ
DATE	01/26/15
PROJECT #:	7595

SHEET TITLE
SITE GRADING PLAN

SHEET NUMBER
C-2

GENERAL NOTES AND CONDITIONS

1. ALL EARTHWORK, GRADING AND PAVING SHALL BE PERFORMED IN ACCORDANCE WITH THE CURRENT STATE DEPARTMENT OF TRANSPORTATION STANDARDS FOR ROAD AND BRIDGE CONSTRUCTION.
2. THE CONTRACTOR SHALL KEEP CAREFUL MEASUREMENTS AND RECORDS OF ALL CONSTRUCTION AND SHALL FURNISH THE ENGINEER AND THE MUNICIPALITY WITH RECORD DRAWINGS UPON COMPLETION OF HIS WORK. ONE SET OF MYLAR REPRODUCIBLE RECORD DRAWINGS AND COPIES MUST BE FURNISHED TO THE OWNER BY THE CONTRACTOR.
3. ALL WORK PERFORMED BY THE CONTRACTOR SHALL BE GUARANTEED BY THE CONTRACTOR FOR A PERIOD OF TWELVE (12) MONTHS FROM THE DATE OF FINAL ACCEPTANCE. THIS GUARANTEE SHALL INCLUDE ALL DEFECTS IN MATERIALS AND WORKMANSHIP.
4. ALL DIRT WILL BE DISPOSED OF OFFSITE BY THE CONTRACTOR.
5. ALL STRUCTURES, INLETS, PIPES, SWALES AND ROADS MUST BE KEPT CLEAN AND FREE OF DIRT AND DEBRIS AT ALL TIMES.
6. THE CONTRACTOR IS RESPONSIBLE FOR MAINTAINING ADEQUATE SIGNS, BARRICADES, FENCING, TRAFFIC CONTROL DEVICES AND MEASURES, AND ALL OTHER MEASURES THAT ARE NECESSARY TO PROTECT THE SAFETY OF THE SITE AT ALL TIMES.
7. THE CONTRACTOR, BY AGREEING TO PERFORM THE WORK, AGREES TO INDEMNIFY AND HOLD HARMLESS THE OWNER, THE ENGINEER, THE VILLAGE, AND ALL AGENTS AND ASSIGNS OF THOSE PARTIES, FROM ALL SUITS AND CLAIMS ARISING OUT OF THE PERFORMANCE OF SAID WORK, AND FURTHER AGREES TO DEFEND OR OTHERWISE PAY ALL LEGAL FEES ARISING OUT OF THE DEFENSE OF SAID PARTIES.
8. WORK MUST COMMENCE AND BE COMPLETED BY THE TIME INDICATED IN THE PROJECT SPECIFICATIONS.
9. EXISTING UTILITIES, IF ANY, ARE SHOWN AS A GUIDE ONLY. THE CONTRACTOR SHALL VERIFY THE LOCATION OF EXISTING UTILITIES PRIOR TO EXCAVATING ANYWHERE ON THE SITE.
10. ALL ADDENDA, IF ANY, MUST BE ACKNOWLEDGED WITH THE BID.

EARTHWORK, GRADING, AND PAVING

1. ALL PROPOSED PAVEMENT AREAS SHALL BE STRIPPED OF ALL TOPSOIL AND UNSUITABLE MATERIAL AND EXCAVATED OR FILLED TO WITHIN 0.10 FEET OF DESIGN SUBGRADE.
2. THE SUBGRADE SHALL BE FREE OF ALL UNSUITABLE MATERIAL AND SHALL BE COMPACTED TO A MINIMUM 95 PER CENT OF MODIFIED PROCTOR DENSITY.
3. THE QUANTITIES CONTAINED IN THESE DOCUMENTS ARE APPROXIMATE AND ESTIMATED, AND ARE PRESENTED AS A GUIDE TO THE CONTRACTOR IN DETERMINING ALL QUANTITIES AND TO BECOME FAMILIAR WITH THE SITE AND SOIL CONDITIONS.
4. THE EARTHWORK CONTRACTOR IS RESPONSIBLE FOR MAINTAINING POSITIVE DRAINAGE AT THE CONCLUSION OF EACH WORKING DAY.
5. THE PAVING CONTRACTOR IS RESPONSIBLE FOR THE FINAL SUBGRADE PREPARATION, THE PAVEMENT BASE, BINDER, AND SURFACE, AND ALL FINAL CLEAN-UP AND RELATED WORK ASSOCIATED WITH THE PAVING OPERATION.
6. UPON COMPLETION OF THE PAVING, THE CONTRACTOR WILL ENSURE THAT POSITIVE DRAINAGE EXISTS ADJACENT TO ALL CONSTRUCTED IMPROVEMENTS.

SOIL EROSION AND SEDIMENT CONTROL

1. REASONABLE CARE MUST BE TAKEN TO MINIMIZE SOIL EROSION, PURSUANT TO PROCEDURES AND STANDARDS FOR URBAN SOIL EROSION AND SEDIMENTATION CONTROL PREPARED BY THE U.S. SOIL AND CONSERVATION SERVICE.
2. ALL INLETS, STRUCTURES, PIPES, SWALES, AND ROADS SHALL BE KEPT CLEAN AND FREE OF DIRT AND SILT.
3. STOCKPILES SHALL HAVE A BERM OR TRENCH AROUND THE CIRCUMFERENCE TO CONTROL SILT IF NEEDED. IF THE STOCKPILE IS TO REMAIN FOR MORE THAN NINE MONTHS IT MUST HAVE SUFFICIENT VEGETATION TO CONTROL BOTH WATER AND WIND EROSION.
4. STRAW BALES FIRMLY ANCHORED SHALL BE PLACED AROUND ALL INLETS, CATCHBASINS, AND SWALES THAT RECEIVE SILTY RUNOFF DURING THE COURSE OF CONSTRUCTION.
5. SILT FENCE TO BE CONSTRUCTED ALONG THE DOWN SLOPE OF THE CONSTRUCTION AREA.
6. MAINTAIN SOIL EROSION CONTROL DEVICES THROUGH THE DURATION OF THIS PROJECT.
7. REPLACE SOIL EROSION CONTROL DEVICES WITH SOD AND TOPSOIL AT THE COMPLETION OF THE PROJECT.
8. ALL ADJACENT ROADWAYS SHALL BE KEPT CLEAN AT ALL TIMES.
9. ADDITIONAL SOIL EROSION CONTROL MEASURES SHALL BE UNDERTAKEN IF DEEMED NECESSARY BY THE ENGINEERING INSPECTOR DURING THE COURSE OF CONSTRUCTION.

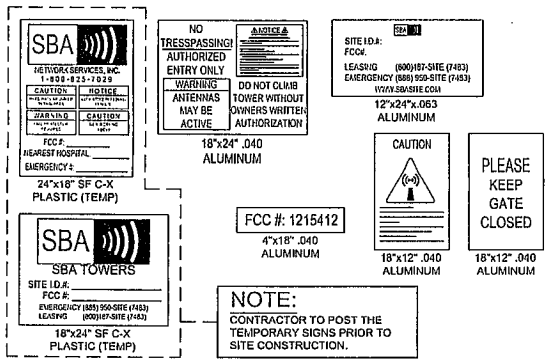

1 SIGN DETAIL
N.T.S.

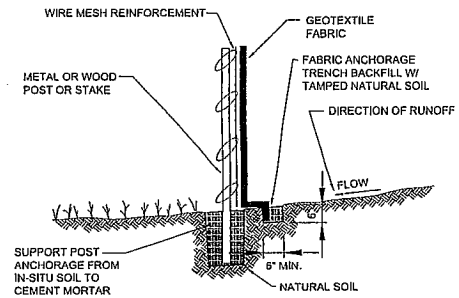

NOTE:
DEPENDING UPON CONFIGURATION, ATTACH FABRIC TO WIRE MESH W/HOG RINGS, STEEL POSTS W/ TIE WIRES, WOOD POSTS W/ NAILS.

2 TYPICAL SILT FENCE DETAIL
N.T.S.

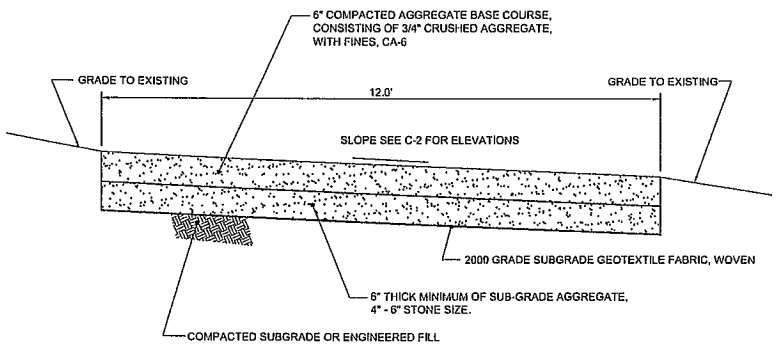

3 AGGREGATE ROAD SECTION
N.T.S.

NOTE:
WEED CONTROL FABRIC SHALL BE USED UNDER ENTIRE PROPOSED GRAVELED AREA WITH A 36" MINIMUM OVERLAP. CONTRACTOR SHALL INSTALL FABRIC PER MANUFACTURER'S RECOMMENDATIONS.

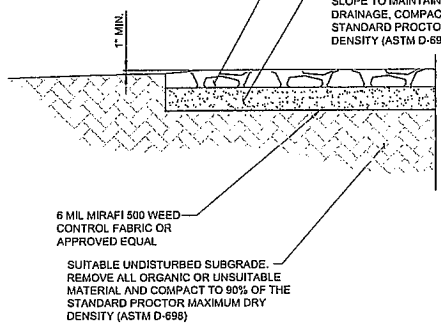

4 COMPOUND FINISH DETAIL
N.T.S.

SBA
SBA TOWERS V, LLC
5900 BROKEN SOUND PKWY. NW.
BOCA RATON, FL 33487
PHONE 1-800-487-7483

TERRA CONSULTING GROUP, LTD.
600 Busse Highway
Park Ridge, IL 60068
Ph: 847/698-6400
Fax: 847/698-6401

REVISIONS

NO.	DESCRIPTION	DATE
-	ISSUED FOR REVIEW/PERMIT	01/20/15

SITE 301513

SBA # MI16549-B

WELLS 3

N 28TH ST
ESCANABA, MI 49829

DRAWN BY:	BTE
CHECKED BY:	TAZ
DATE:	01/20/15
PROJECT #:	7595

SHEET TITLE
SITE DETAILS & SPECIFICATIONS

SHEET NUMBER
C-3

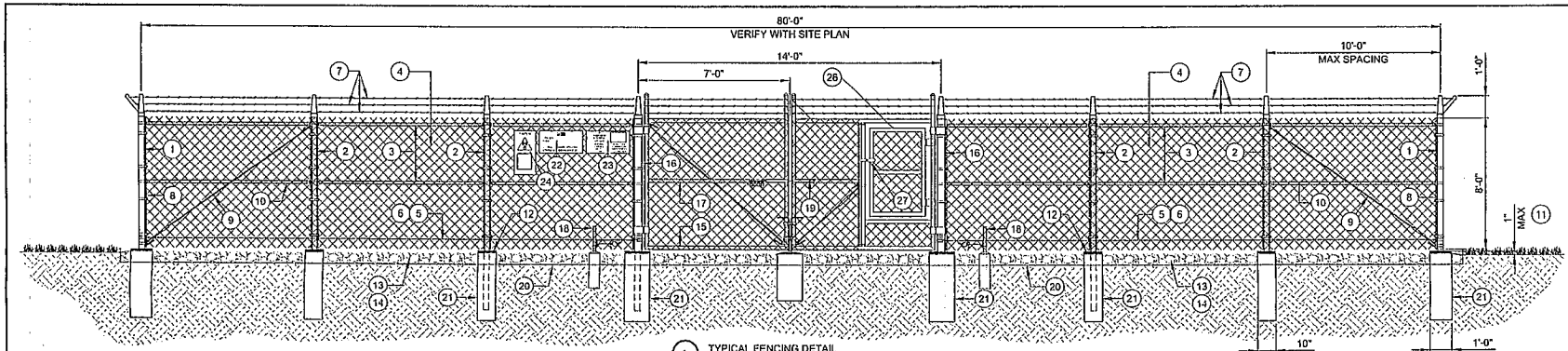

1 TYPICAL FENCING DETAIL
N.T.S.

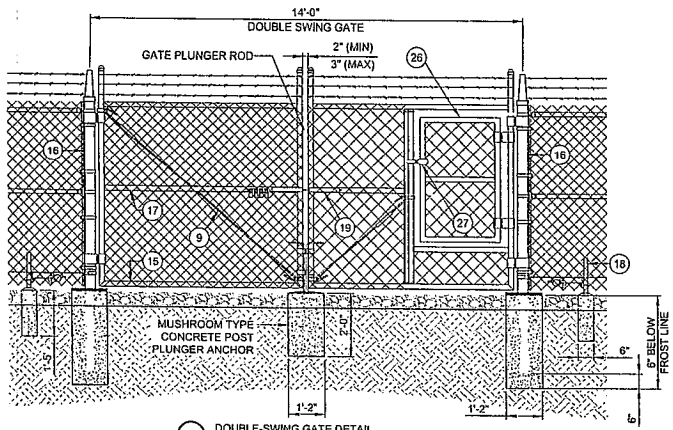

2 DOUBLE-SWING GATE DETAIL
N.T.S.

GENERAL NOTES:

1. INSTALL FENCING PER ASTM F-567
2. INSTALL SWING GATES PER ASTM F- 900
3. LOCAL ORDINANCE OF BARBED WIRE PERMIT REQUIREMENT SHALL BE COMPLIED IF REQUIRED.
4. POST & GATE PIPE SIZES ARE INDUSTRY STANDARDS. ALL PIPE TO BE GALVANIZED (HOT DIP, ASTM A120 GRADE "A" STEEL). ALL GATE FRAMES SHALL BE WELDED. ALL WELDING SHALL BE COATED WITH (3) COATS OF COLD GALV. (OR EQUAL).
5. ALL OPEN POSTS SHALL HAVE END-CAPS.
6. USE GALVANIZED HOG-RING WIRE TO MOUNT ALL SIGNS.
7. ALL SIGNS MUST BE MOUNTED ON INSIDE OF FENCE FABRIC.
8. MUSHROOM ANCHOR & PLUNGER REQUIRED FOR GATE.
9. G.C. RESPONSIBLE FOR SBA GATE LOCK

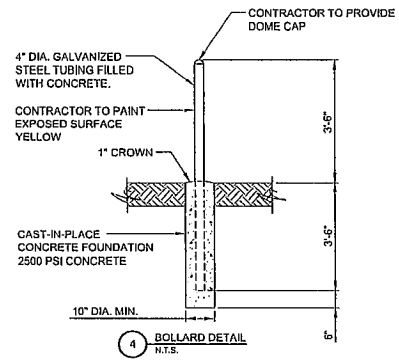

4 BOLLARD DETAIL
N.T.S.

BALLOON REFERENCE NOTES:

1. CORNER, END OR PULL POST: 3" O.D. SCHEDULE 40 PIPE.
2. LINE POST: 2 1/2" NOMINAL SCHEDULE 40 PIPE, PER ASTM-F1083. LINE POSTS SHALL BE EQUALLY SPACED AT MAXIMUM 10'-0" O.C.
3. TOP RAIL & BRACE RAIL: 1-5/8" O.D. STANDARD ROUND PIPE, PER ASTM-F1083.
4. FABRIC: 9 GA CORE WIRE SIZE 2" MESH, CONFORMING TO ASTM-A392.
5. TIE WIRE: 9 GA ALUMINUM. A SINGLE WRAP OF FABRIC TIE AND AT TENSION WIRE BY HOG RINGS SPACED 12" O.C. POSTS/GATES AND 24" RAILS/WIRE.
6. TENSION WIRE: 9 GA ALUMINUM.
7. BARBED WIRE: DOUBLE STRAND 12-1/2" O.D. TWISTED WIRE TO MATCH WITH FABRIC. 14 GA, 4 PT. BARBS SPACED ON APPROXIMATELY 5" CENTERS.
8. 3/16" x 3/4" (MIN) FULL HEIGHT STRETCHER BAR.
9. 3/8" DIAGONAL ROD WITH GALVANIZED STEEL TURNBUCKLE OR DIAGONAL THREADED ROD.
10. FENCE CORNER POST BRACE: 1 5/8" NOMINAL PIPE.
11. 1" MAXIMUM CLEARANCE FROM FINISH GRADE.
12. FENCE POST FOUNDATION TO BE 1" FINISH ABOVE FINISHED GRADE.
13. 6" COMPACTED BASE MATERIAL.
14. FINISH GRADE SHALL BE UNIFORM AND LEVEL.
15. WELDED GATE FRAME: 2" O.D., SCHEDULE 40 PIPE, PER ASTM-F1083.
16. GATE POST 4" O.D., SCHEDULE 40 PIPE, PER ASTM-F1083.
17. GATE FRAME BRACE RAIL: 1 1/2" NOMINAL PIPE, PER ASTM-F1083.
18. DUCK BILL OPEN GATE HOLDER. VERIFY LOCATION IN FIELD PRIOR TO INSTALLATION.
19. STYMIE LOCK MULTI-TENANT LOCKING DEVICE.
20. GEO-TEXTILE FABRIC.
21. CONCRETE FOUNDATION (MIN 3000 PSI). MINIMUM DEPTH: 6" BELOW FROST LINE
22. 12" x 24" SBA SITE INFORMATION SIGN.
23. 12" x 24" NO TRESPASSING SIGN.
24. 12" x 24" RF CAUTION SIGN.
25. 18" x 12" KEEP GATE CLOSED SIGN.
26. 4' WIDE SNOW GATE WITHIN DOUBLE SWING GATE FRAME
27. FORK LATCH WITH COMBINATION LOCK

SBA
SBA TOWERS V, LLC
5900 BROKEN SOUND PKWY NW
BOCA RATON, FL 33487
PHONE 1-866-257-7283

TERRA CONSULTING GROUP, LTD.
600 Busse Highway
Park Ridge, IL 60068
Ph: 847/698-6100
Fax: 847/698-6401

REVISIONS

NO.	DESCRIPTION	DATE
-	ISSUED FOR REVIEW/PERMIT	01/26/15

SITE 301513

SBA # MI16549-B

WELLS 3

N 28TH ST
ESCANABA, MI 49829

DRAWN BY:	BTE
CHECKED BY:	TAZ
DATE:	01/26/15
PROJECT #:	7595

SHEET TITLE
FENCE DETAILS

SHEET NUMBER
C-4

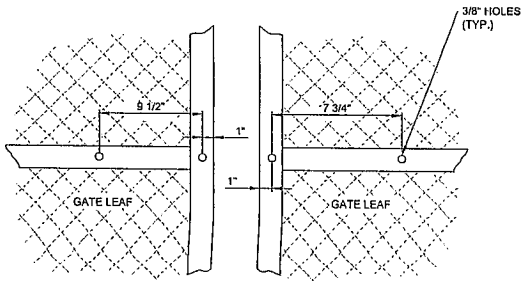

1 GATE FACE - ACCOMODATING STYMIELOCK
N.T.S.

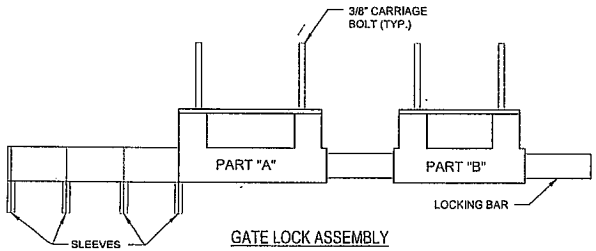

GATE LOCK ASSEMBLY

"STYMIELOCK" MULTI LOCKING DEVICE OR APPROVED EQUAL

2 GATELOCK ASSEMBLY DETAIL
N.T.S.

STYMIELOCK INSTALLATION

1. DRILL 3/8" HOLES IN THE GATE LEAF USING THE GATE DIMENSIONS PROVIDED.
2. SLIDE THE CARRIAGE BOLTS IN THE SLOTS ON THE BACK OF PART "B" AND PUSH THE BOLTS THROUGH THE HOLES DRILLED IN THE GATE FIGURE. PUT THE NUT AND THE LOCKNUT ON AND TIGHTEN AND CUT THE EXCESS BOLT OFF. DO THE SAME WITH PART "A".
3. ADD THE NUMBER OF SLEEVES NEEDED FOR THE NUMBER OF LOCKS AND SLIDE THE LOCKING BAR INTO PLACE THROUGH BOTH PART "A" AND PART "B". NOW INSTALL THE LOCKS.
4. IF THE GATE HAS NO CENTER BAR IN THE GATE LEAF YOU MAY NEED TO MOUNT THE STYMIELOCK VERTICALLY USING THE SAME DIMENSIONS GIVEN ON THE GATE FACE.
5. VERTICAL APPLICATION MAY ALSO BE USED ON SLIDING GATES WITH MULTIPLE LOCKS.

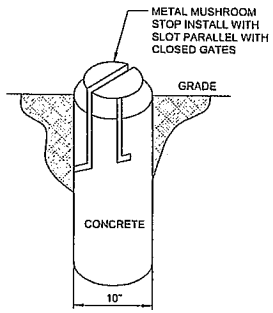

3 MUSHROOM STOP DETAIL
N.T.S.

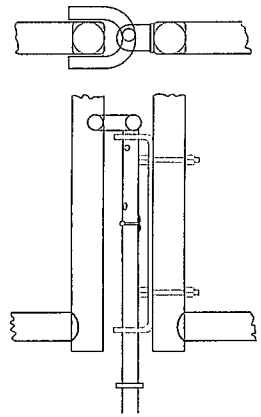

4 DROP ROD ASSEMBLY DETAIL
N.T.S.

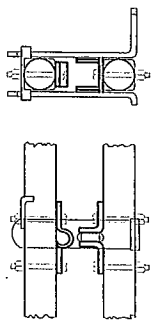

5 LATCH ASSEMBLY DETAIL
N.T.S.

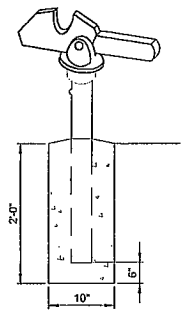

6 GATE KEEPER DETAIL
N.T.S.

SBA
SBA TOWERS V, LLC
5900 BROKEN SOUND PKWY NW
BOCA RATON, FL 33487
PHONE 1-561-197-7293

TERRA CONSULTING GROUP, LTD.
600 Busse Highway
Park Ridge, IL 60068
Ph: 847/698-6400
Fax: 847/698-6401

REVISIONS

NO.	DESCRIPTION	DATE
1	ISSUED FOR REVIEW/PERMIT	01/20/15

SITE 301513

SBA # MI16549-B

WELLS 3

N 28TH ST
ESCANABA, MI 49829

DRAWN BY:	BTE
CHECKED BY:	TAZ
DATE:	01/20/15
PROJECT #:	7695

SHEET TITLE
FENCE DETAILS

SHEET NUMBER
C-5

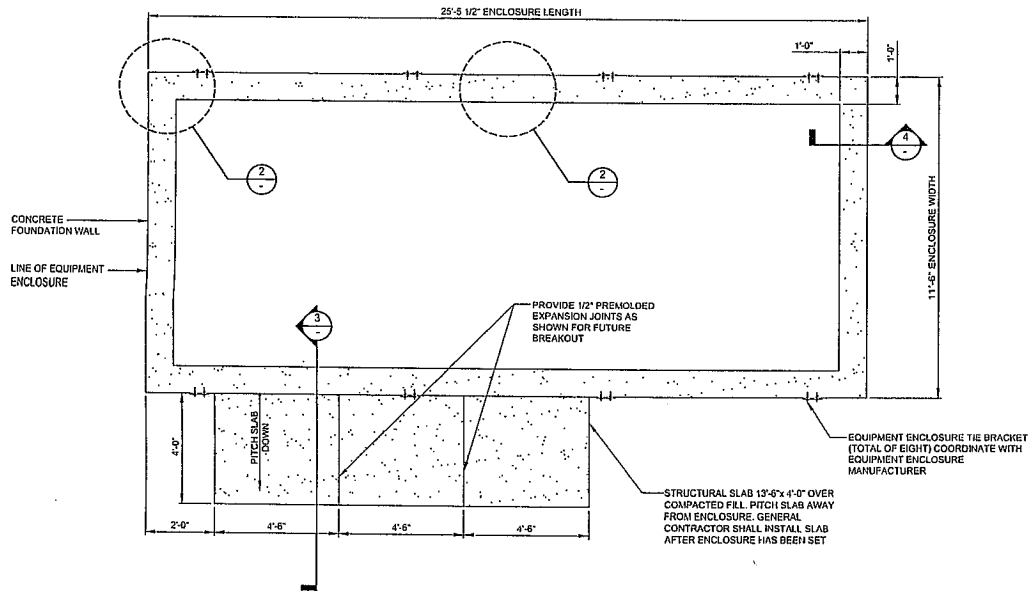

1 EQUIPMENT ENCLOSURE FOUNDATION PLAN
N.T.S.

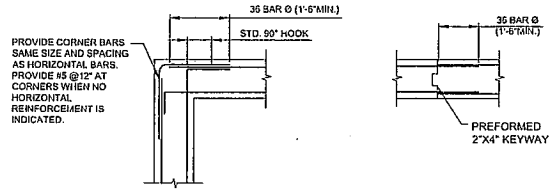

2 CONCRETE WALL REINFORCEMENT DETAILS
N.T.S.

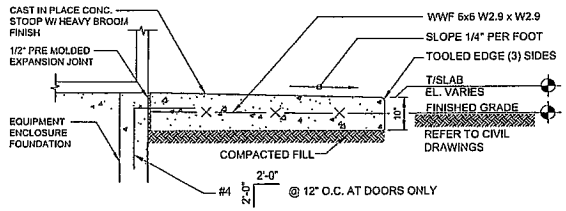

3 STOOP DETAIL
N.T.S.

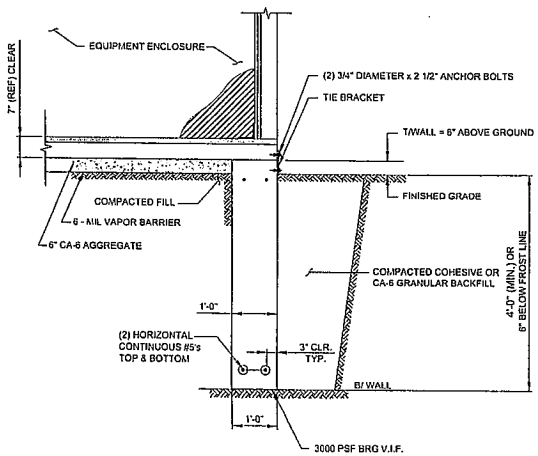

4 FOUNDATION WALL SECTION
N.T.S.

NOTE:
LOCALIZED AREAS OF SOFT OR LOOSE MATERIALS MAY BE ENCOUNTERED AT THE PROPOSED BEARING ELEVATION. THE SOILS MAY REQUIRE COMPACTION USING A PLATE COMPACTOR IN THE FOOTING TRENCH IF FIELD CONDITIONS INDICATE LOOSE GRANULAR SOILS. THE SOILS MAY REQUIRE REMOVAL AND REPLACEMENT WITH AN APPROVED ENGINEERED FILL. FOUNDATION DEPTH AND OVER DIG REQUIREMENTS SHALL BE VERIFIED WITH THE RECOMMENDATIONS OF THE GEOTECHNICAL REPORT AND INCLUDED IN THE BID BEFORE CONSTRUCTION. THE EVALUATION OF THE SUB GRADE AND SELECTION OF FILL MATERIALS SHALL BE MONITORED AND TESTED BY A QUALIFIED REPRESENTATIVE OF THE SOILS ENGINEER.

A. EQUIPMENT ENCLOSURE FOUNDATION

1. REFER TO CIVIL DRAWINGS FOR ORIENTATION OF THE FOUNDATIONS.
2. EQUIPMENT ENCLOSURE FOUNDATION IS DESIGNED FOR THE FOLLOWING LOADS:
   ENCLOSURE DEAD LOAD: 70,000 LBS.
   ROOF LIVE LOAD: 30 PSF
   FLOOR LIVE LOAD: 125 PSF
3. THE CONTRACTOR SHALL NOTIFY THE CLIENT'S GEOTECHNICAL ENGINEER TO COORDINATE HAVING A FIELD REPRESENTATIVE ON SITE FOR TESTING AND INSPECTION.
4. FOOTINGS SHALL BEAR ON VIRGIN SOIL OR COMPACTED FILL MATERIAL CAPABLE OF SUPPORTING A MINIMUM SOIL BEARING PRESSURE OF 3000 PSF.
5. SUBGRADE PREPARATION:
   A. REMOVE ALL SOILS CONTAINING TOPSOIL; ORGANIC MATERIALS, AND/OR FILL MATERIALS FROM WITHIN AREA OF ENCLOSURE FOUNDATION.
   B. PROOF ROLL RESULTING SUBGRADE WITH A HEAVILY LOADED SINGLE AXLE ROLLER OR SIMILAR VEHICLE. (20 TON LOAD). CONTRACTOR SHALL UNDERCUT AND REPLACE WITH ENGINEERED FILL. ALL LOOSE SOFT OR UNSTABLE AREAS REVEALED DURING PROOFROLLING AS DIRECTED BY THE TESTING AGENCY. CONTRACTOR SHALL INCLUDE ANTICIPATED UNDERCUT AND REPLACEMENT AS INDICATED IN THE GEOTECHNICAL REPORT AS PART OF THE BID.
   C. BACKFILL AND COMPACT THE AREA WITHIN THE BUILDING FOUNDATION. BETWEEN RESULTANT SUBGRADE AND FOUNDATION WALL WITH APPROVED GRANULAR MATERIAL.
6. FOUNDATION WALLS SHALL BE BACKFILLED EVENLY ON EACH SIDE OF THE WALL OR WALLS SHALL BE ADEQUATELY BRACED BY THE CONTRACTOR UNTIL FLOOR SLAB HAS BEEN PLACED AND CURED FOR 72 HOURS MINIMUM.
7. ENCLOSURE SHALL NOT BE SET UNTIL FLOOR SLAB HAS BEEN CURED FOR 72 HOURS MINIMUM.
8. CONTRACTOR TO ENSURE FOUNDATION / SLAB ARE POURED TO MEET FLATNESS LEVEL TOLERANCES AS INDICATED IN ACI 4.5.6 AND 4.5.7.

B. EQUIPMENT ENCLOSURE

THE EQUIPMENT ENCLOSURE IS A PRE-FABRICATED BUILDING MANUFACTURED BY FIBREBOND, MINDEN, LOUISIANA.

THE EQUIPMENT ENCLOSURE BUILDING SHALL BE FURNISHED AND INSTALLED BY THE OWNER UNDER SEPARATE CONTRACT PER THE OWNER AND MANUFACTURER SPECIFICATIONS.

C. CONCRETE NOTES

1. ALL CONCRETE WORK SHALL CONFORM TO THE REQUIREMENTS OF ACI 318 AND ACI 301, LATEST EDITION. THESE DOCUMENTS SHALL BE AVAILABLE IN THE FIELD OFFICE.
2. EXCEPT WHERE OTHERWISE INDICATED, CONCRETE SHALL BE NORMAL WEIGHT AND WITH MINIMUM 28-DAY COMPRESSIVE STRENGTHS OF $F'c$=4000 PSI. ALL EXTERIOR EXPOSED CONCRETE SHALL BE AIR ENTRAINED.
3. REINFORCING BARS SHALL CONFORM TO ASTM A615, GRADE 60. ALL WELDED WIRE FABRIC SHALL CONFORM TO ASTM A185.

SBA
SBA TOWERS V, LLC
5900 BROKEN SOUND PK W. BLVD
BOCA RATON, FL 33487
PHONE: 1-800-487-7483

TERRA CONSULTING GROUP, LTD.
600 Busse Highway
Park Ridge, IL 60068
Ph: 847/698-6400
Fax: 847/698-6401

REVISIONS

NO.	DESCRIPTION	DATE
-	ISSUED FOR REVIEW/PERMIT	01/20/15

SITE 301513

SBA # MI16549-B

WELLS 3

N 28TH ST
ESCANABA, MI 49829

DRAWN BY:	BTE
CHECKED BY:	TAZ
DATE:	01/20/15
PROJECT #:	7505

SHEET TITLE
EQUIPMENT ENCLOSURE FOUNDATION PLAN

SHEET NUMBER
C-6

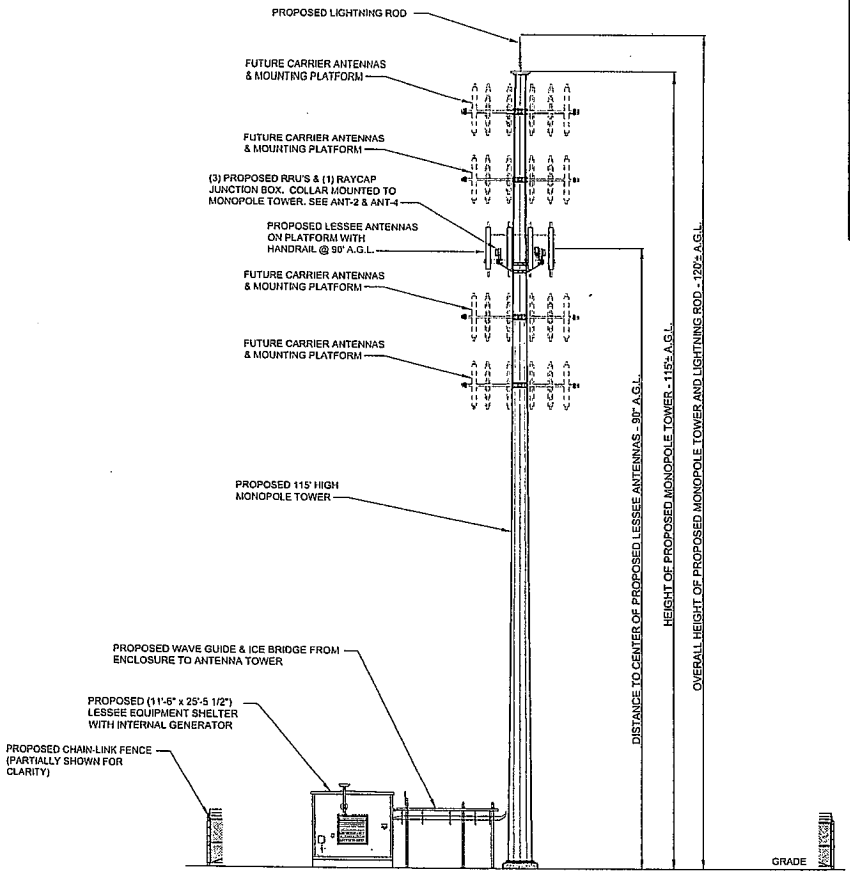

1 SOUTH ELEVATION
SCALE: 1/8" = 1'-0"

0 1/2" 1" 2"
SCALE: 1/8" = 1'-0"

21" x 36" PRINT IS THE FULL SCALE FORMAT. ANY SIZE OTHER THAN THAT IS AT REDUCED SCALE

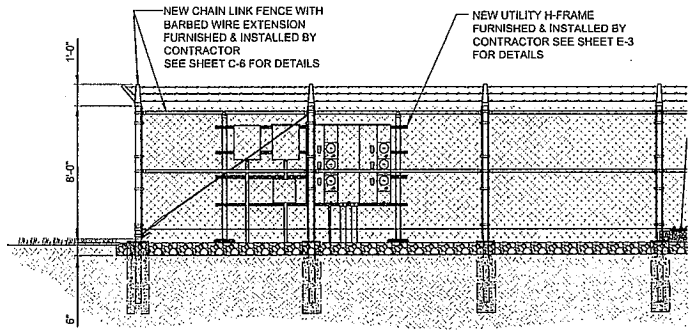

2 ELEVATION VIEW @ UTILITY H-FRAME
N.T.S.

SBA

SBA TOWERS V, LLC
5900 BROKEN SOUND PKWY NW
BOCA RATON, FL 33487
PHONE 1-800-487-7483

TERRA CONSULTING GROUP, LTD.
600 Busse Highway
Park Ridge, IL 60068
Ph: 847/698-6400
Fax: 847/698-6401

REVISIONS

NO.	DESCRIPTION	DATE
-	ISSUED FOR REVIEW/PERMIT	11/12/14
1.	UPDATE WITH ECR	2/19/15

SITE 301513

SBA # MI16549-B

WELLS 3

2842 N 28TH ST
ESCANABA, MI 49829

DRAWN BY:	BTE
CHECKED BY:	TAZ
DATE:	11/12/14
PROJECT #:	7595

SHEET TITLE
ANTENNA ELEVATION

SHEET NUMBER
ANT-1

EQUIPMENT CHANGE REQUEST FORM- ECR

Cell Name	Danforth			Cell ID	AP569
Location Number	301513	RF Engineer	Mustafa Siamof	Address	2842 North 28th Street
Date of Request	10/18/2014	Market	Appleton	City/State/Zip	Escanaba, MI

PROPOSED CONFIGURATION

Configuration Drawing

Antenna											
Sector	Pos	Port	RF Path	Antenna Manufacturer	Antenna Model	Antenna Serial Number	Centerline	Azimuth	Variable Tilt	Mechanical Tilt	Action
Alpha	A1	L1 (-45)	LTE C - RxTx0	ANTEL	CWWX063X25G00		90	35	3	0	Add-Install
		L2 (+45)	LTE C - RxTx1								
		H1 (-45)	AWS - Rx2						2		
		H2 (+45)	AWS - Rx3								
	A2	L1 (-45)	850 LTE- RxTx0	ANTEL	CWWX063X25G00		90	35	0	0	Add-Install
		L2 (+45)	850 LTE- RxTx1								
		H1 (-45)	Unused at this time						0		
		H2 (+45)	Unused at this time								
	A3	L1 (-45)	Unused at this time								
		L2 (+45)	Unused at this time								
		H1 (-45)	Unused at this time								
		H2 (+45)	Unused at this time								
	A4	L1 (-45)	LTE C - Rx2	ANTEL	CWWX063X25G00		90	35	3	0	Add-Install
		L2 (+45)	LTE C - Rx3								
		H1 (-45)	AWS - RxTx0						2		
		H2 (+45)	AWS - RxTx1								
Beta	B1	L1 (-45)	LTE C - RxTx0	ANTEL	CWWX063X25G00		90	130	5	0	Add-Install
		L2 (+45)	LTE C - RxTx1								
		H1 (-45)	AWS - Rx2						3		
		H2 (+45)	AWS - Rx3								
	B2	L1 (-45)	850 LTE- RxTx0	ANTEL	CWWX063X25G00		90	130	0		Add-Install
		L2 (+45)	850 LTE- RxTx1								
		H1 (-45)	Unused at this time						0		
		H2 (+45)	Unused at this time								
	B3	L1 (-45)	Unused at this time								
		L2 (+45)	Unused at this time								
		H1 (-45)	Unused at this time								
		H2 (+45)	Unused at this time								
	B4	L1 (-45)	LTE C - Rx2	ANTEL	CWWX063X25G00		90	130	5	0	Add-Install
		L2 (+45)	LTE C - Rx3								
		H1 (-45)	AWS - RxTx0						3		
		H2 (+45)	AWS - RxTx1								
GAMMA	G1	L1 (-45)	LTE C - RxTx0	ANTEL	CWWX063X25G00		90	270	5	0	Add-Install
		L2 (+45)	LTE C - RxTx1								
		H1 (-45)	AWS - Rx2						3		
		H2 (+45)	AWS - Rx3								
	G2	L1 (-45)	850 LTE- RxTx0	ANTEL	CWWX063X25G00		90	270	0		Add-Install
		L2 (+45)	850 LTE- RxTx1								
		H1 (-45)	Unused at this time						0		
		H2 (+45)	Unused at this time								
	G3	L1 (-45)	Unused at this time								
		L2 (+45)	Unused at this time								
		H1 (-45)	Unused at this time								
		H2 (+45)	Unused at this time								
	G4	L1 (-45)	LTE C - Rx2	ANTEL	CWWX063X25G00		90	270	5	0	Add-Install
		L2 (+45)	LTE C - Rx3								
		H1 (-45)	AWS - RxTx0						3		
		H2 (+45)	AWS - RxTx1								

Comments

PPC CONNECTORS ONLY

1 PROPOSED ANTENNA CONFIGURATION
N.T.S.

ESTIMATED MAIN LINE HYBRID LENGTH			
ANTENNA CENTERLINE (±)	ICE BRIDGE LENGTH (±)	SHELTER (±)	TOTAL (±)
90'	21'	15'	126'

Proposed

	Location	Manufacturer	Component Model	Count	Action
Passive Components	Top (Platform)	Andrew	CBC78-DF-8-DCB	6	Install
	Top (Platform)	Ericsson	RRU - AWS	3	Install
	Top (Platform)	Ericsson	RRUS - A2	3	Install
	Top (Platform)	Westell	BWC-TTMA-700C-VG	6	Install
	Top (Platform)	Raycap	RC2DC-3315-PF-48	1	Install
	Bottom (Shelter)	Andrew	CBC78-DF-8-DCB	6	Install
	Bottom (Shelter)	Raycap	RC2DC-3315-PF-48	1	Install

	Sector	Coax Manufacturer	Type	Size	Count	Action
Coax	Alpha	ANDREW		1 5/8"	4	Final
	Beta	ANDREW		1 5/8"	4	Final
	Gamma	ANDREW		1 5/8"	4	Final
	Hybrid Cable	ANDREW	HFT1206-24S26-XXX	1 5/8	1	Install

Comments

All Antenna RETs per sector will be daisy chained together and connect to RRU. Diplxer are for LTE RX Only Paths

2 COMBINER CABLE DATA INFORMATION
N.T.S.

PER SECTOR (NEW BUILD)

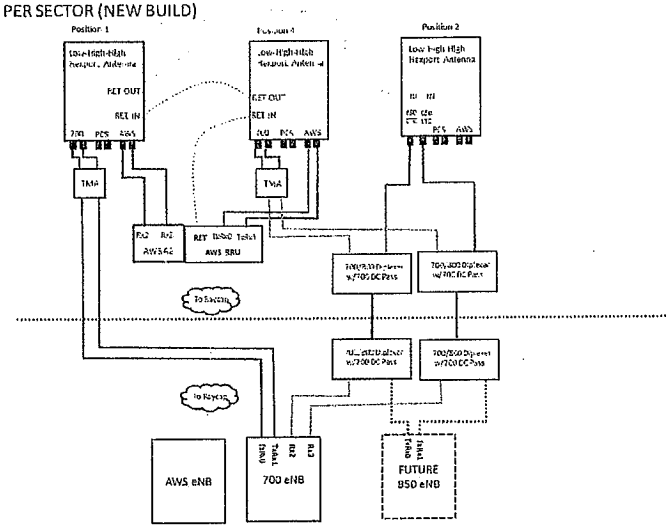

3 CABLE DIAGRAM
N.T.S.

SBA
SBA TOWERS V, LLC
5900 BROKEN SOUND PARKWAY NW
BOCA RATON, FL 33487
PHONE: 1-800-487-7483

TERRA CONSULTING GROUP, LTD.
300 Busse Highway
Park Ridge, IL 60068
Ph: 847/698-6400
Fax: 847/698-6401

REVISIONS

NO.	DESCRIPTION	DATE
-	ISSUED FOR REVIEW/PERMIT	11/12/14
1.	UPDATE WITH ECR	2/19/15

SITE 301513

SBA # MI16549-B

WELLS 3

2842 N 28TH ST
ESCANABA, MI 49829

DRAWN BY:	BTE
CHECKED BY:	TAZ
DATE:	11/12/14
PROJECT #:	7595

SHEET TITLE
ANTENNA INFORMATION

SHEET NUMBER
ANT-2

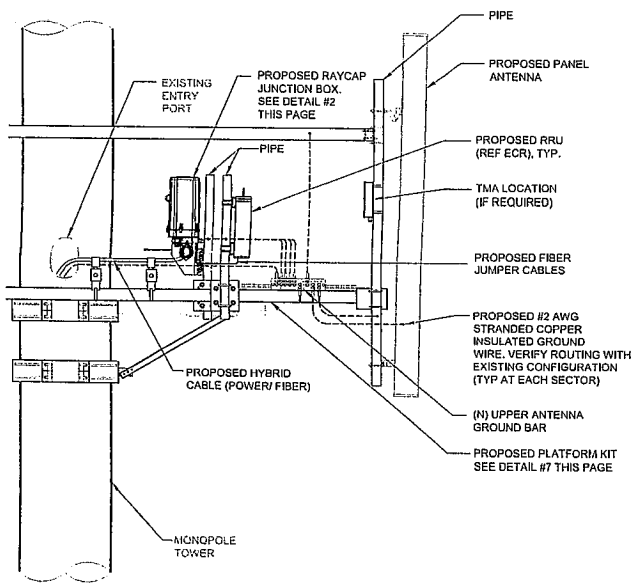

1 ANTENNA, RRU & RAYCAP JUNCTION BOX MOUNTING DETAIL
SCALE: N.T.S.

SPECIFICATIONS	DC SURGE PROTECTION FOR RRU/INTEGRATED ANTENNA RADIO HEAD	[mm]
APPLICATION:	TOWER / BASE / ROOFTOP / ROOFTOP DISTRIBUTION MODELS	INCHES
WEIGHT:	32LBS (14.51 KG)	

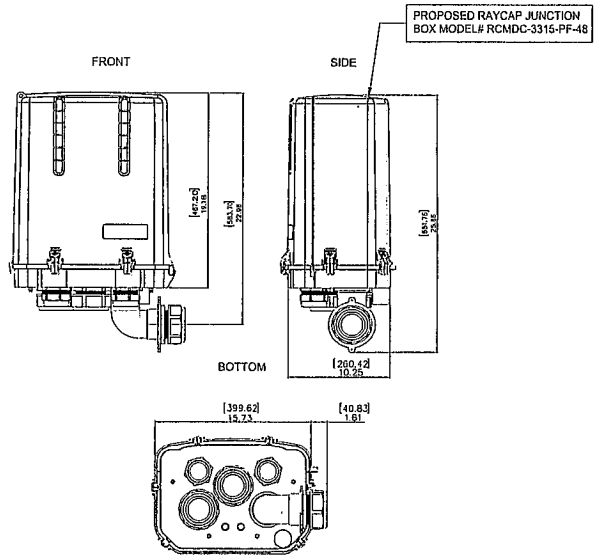

2 RAYCAP JUNCTION BOX DETAIL
SCALE: N.T.S.

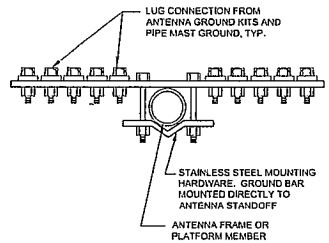

3 GROUND BAR AT SECTOR
N.T.S.

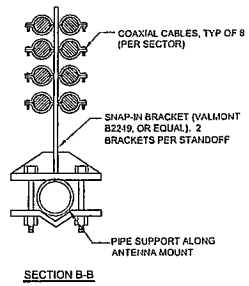

4 SNAP-IN BRACKET AT ANTENNA MOUNT
N.T.S.

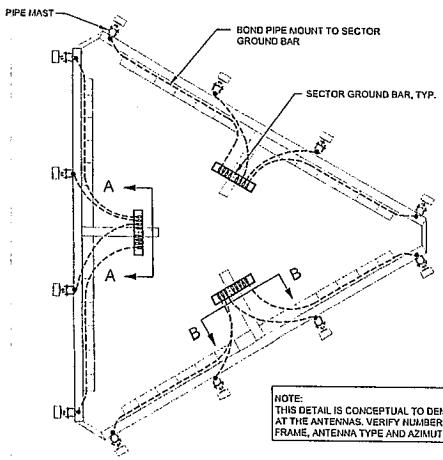

NOTE:
THIS DETAIL IS CONCEPTUAL TO DEMONSTRATE GROUNDING AT THE ANTENNAS. VERIFY NUMBER OF ANTENNAS, MOUNTING FRAME, ANTENNA TYPE AND AZIMUTH WITH ANT-1 SHEET.

5 PIPE MAST GROUNDING AT ANTENNA ELEVATION
N.T.S.

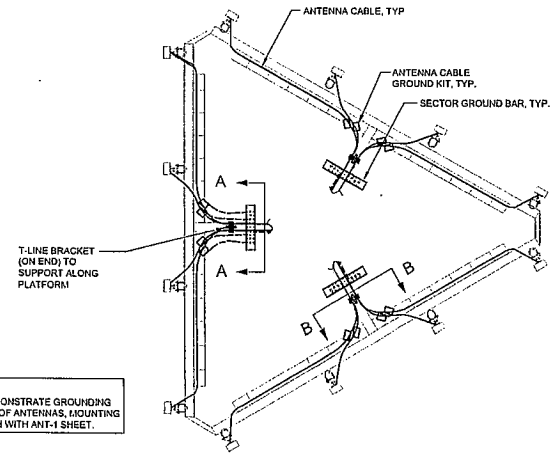

6 ANTENNA CABLE GROUNDING AT ANTENNA ELEVATION
N.T.S.

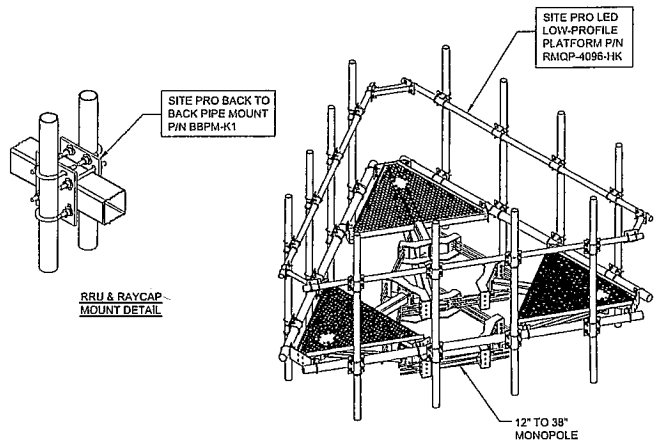

7 LED LO-PROFILE PLATFORM DETAIL
SCALE: N.T.S.

SBA
SBA TOWERS V, LLC
5900 BROKEN SOUND PKWY. NW.
BOCA RATON, FL 33487
PHONE 1-866-487-7283

TERRA CONSULTING GROUP, LTD.
500 Busse Highway
Park Ridge, IL 60068
Ph: 847/696-6400
Fax: 847/696-6401

REVISIONS

NO.	DESCRIPTION	DATE
1	ISSUED FOR REVIEW/PERMIT	11/12/14
2	UPDATE WITH ECR	2/9/15

SITE 301513

SBA # MI16549-B

WELLS 3

2842 N 28TH ST
ESCANABA, MI 49829

DRAWN BY:	BTE
CHECKED BY:	TAZ
DATE:	11/12/14
PROJECT #:	7595

SHEET TITLE
ANTENNA MOUNTING DETAILS

SHEET NUMBER
ANT-3

NOTE:
INSTALL EACH GPS ON THE CLOSEST ICE BRIDGE POSTS TO SHELTER (TYP. AT 2 LOCATIONS).

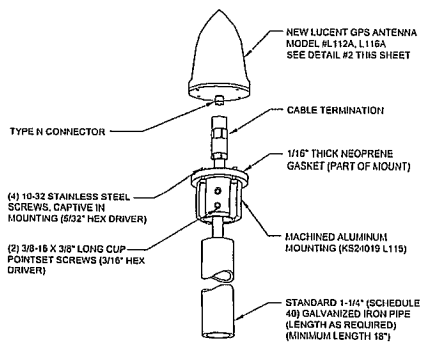

1 TYPICAL GPS DETAIL
N.T.S.

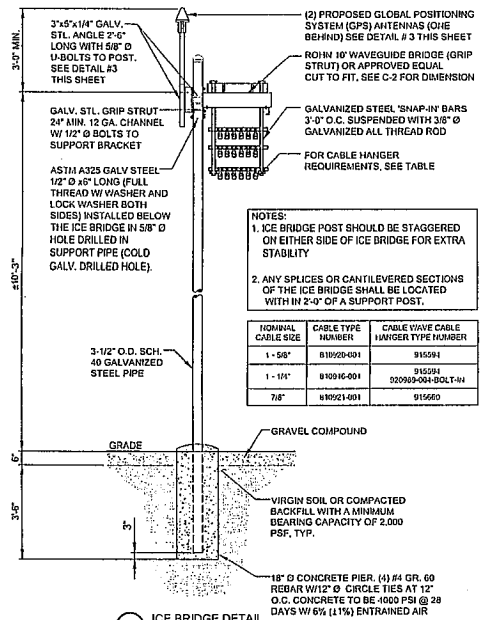

NOTES:
1. ICE BRIDGE POST SHOULD BE STAGGERED ON EITHER SIDE OF ICE BRIDGE FOR EXTRA STABILITY
2. ANY SPLICES OR CANTILEVERED SECTIONS OF THE ICE BRIDGE SHALL BE LOCATED WITH IN 2'-0" OF A SUPPORT POST.

NOMINAL CABLE SIZE	CABLE TYPE NUMBER	CABLE WAVE CABLE HANGER TYPE NUMBER
1 - 5/8"	810920-001	915594
1 - 1/4"	810916-001	915594 920909-004-BOLT-W
7/8"	810921-001	915660

2 ICE BRIDGE DETAIL
N.T.S.

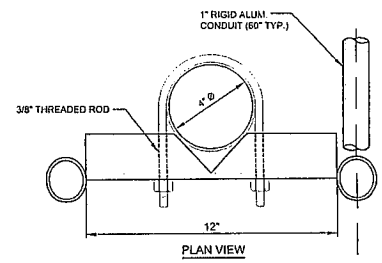

PLAN VIEW

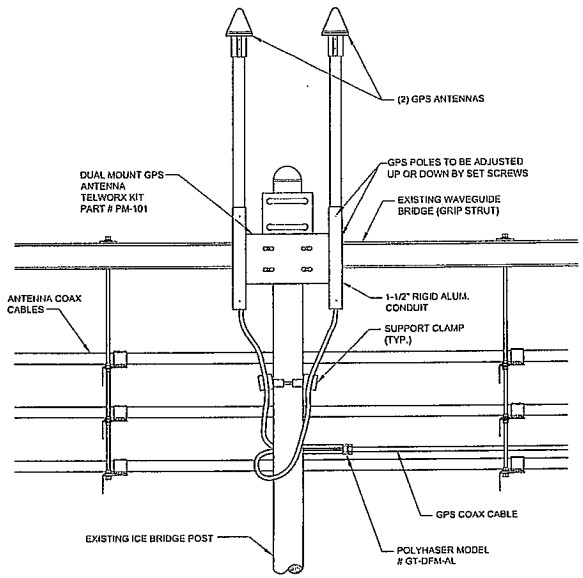

3 GPS MOUNTING DETAIL
N.T.S.

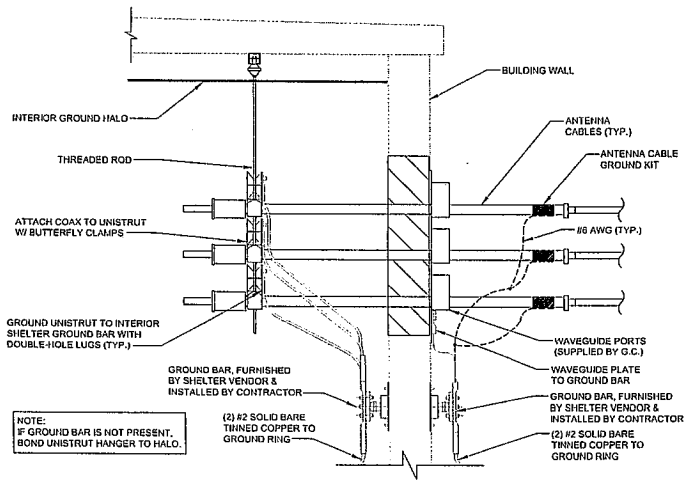

NOTE:
IF GROUND BAR IS NOT PRESENT, BOND UNISTRUT HANGER TO HALO.

4 ENCLOSURE ENTRY PANEL GROUNDING DETAIL
N.T.S.

SBA
SBA TOWERS VI, LLC
5900 BROKEN SOUND PKWY NW
BOCA RATON, FL 33487
PHONE 1-866-457-7482

TERRA CONSULTING GROUP, LTD.
600 Busse Highway
Park Ridge, IL 60068
Ph: 847/698-6400
Fax: 847/698-6401

REVISIONS

NO.	DESCRIPTION	DATE
1	ISSUED FOR REVIEW/PERMIT	01/26/15

SITE 301513

SBA # MI16549-B

WELLS 3

N 28TH ST
ESCANABA, MI 49829

DRAWN BY	DTE
CHECKED BY:	TAZ
DATE:	01/26/15
PROJECT #:	7555

SHEET TITLE
ANTENNA MOUNTING DETAILS

SHEET NUMBER
ANT-4

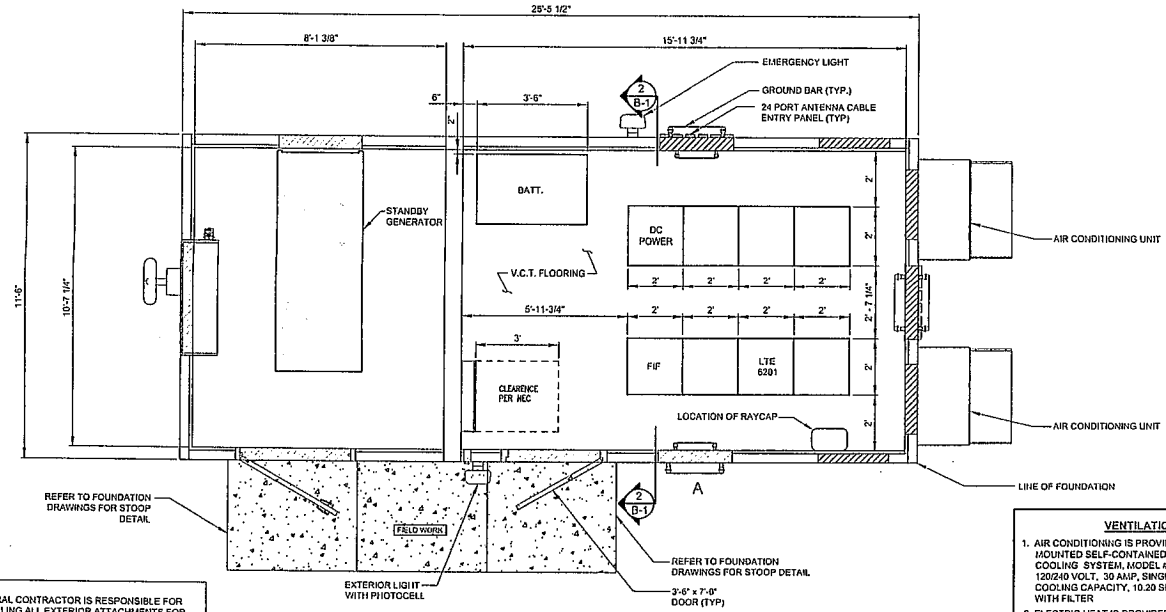

1 FLOOR PLAN-EQUIPMENT ENCLOSURE
SCALE: 1/2" = 1'-0"

0 1/2" 1" 2"
24" x 36" PRINT IS THE FULL SCALE FORMAT, ANY SIZE OTHER THAN THAT IS AT REDUCED SCALE.

NOTE:
GENERAL CONTRACTOR IS RESPONSIBLE FOR INSTALLING ALL EXTERIOR ATTACHMENTS FOR GENERATOR (HOODS, MUFFLER, VENT, FILL, ETC.)

VENTILATION NOTES:

1. AIR CONDITIONING IS PROVIDED BY A BARD WALL MOUNTED SELF-CONTAINED ENERGY EFFICIENT COOLING SYSTEM, MODEL # WA602-A05EX2X1.5 TON. 120/240 VOLT, 30 AMP, SINGLE PHASE, 57,500 BTUH COOLING CAPACITY, 10.20 SEER, 24" DIA. FAN, 2600 CFM WITH FILTER
2. ELECTRIC HEAT IS PROVIDED BY 5 KW, 18,840 BTUH, 240 VOLT, SINGLE PHASE HEAT STRIP, WITHIN BARD UNIT LISTED ABOVE.

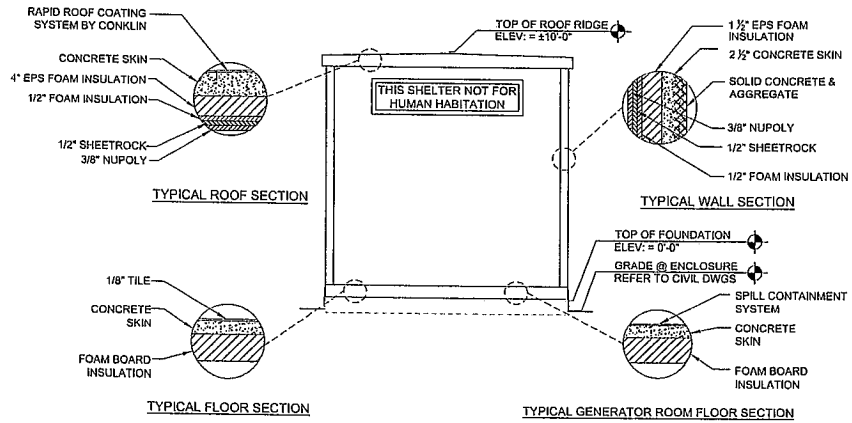

2 TRANSVERSE SECTION
N.T.S.

VENTILATION SCHEDULE

ROOM PURPOSE	AREA	VENTILATION				REMARKS
		NATURAL		MECHANICAL		
		ACTUAL	REQUIRED	ACTUAL	REQUIRED	
WIRELESS TELEPHONE EQUIPMENT ENCLOSURE (NON-INHABITED)	292.8 S.F.	0 CFM	0 CFM	2600 CFM	0 CFM	SEE NOTE 1.

NOTES:

1. EQUIPMENT ENCLOSURE IS PRE MANUFACTURED. THIS SHEET IS PROVIDED AS GUIDE ONLY. REFER TO ACTUAL DRAWINGS BY SHELTER MANUFACTURE FOR FULL BUILDING PLANS.
2. EPS BOARD INSULATION IS LISTED TO HAVE A FLAME SPREAD OF 25 OR LESS AND SMOKE DEVELOPED OF 450 OR LESS WITH A MAXIMUM THICKNESS OF 2 INCHES AT 1 PCF DENSITY. POLYISOCYANURATE FOAM INSULATION HAS BEEN TESTED TO A MAXIMUM THICKNESS OF 3 INCHES AT 1.9 PCF AND HAS A FLAME SPREAD OF 25 AND A SMOKE PRODUCT OF 395.
3. INTERIOR PANELING IS LISTED TO HAVE A FLAMESPREAD OF 200 OR LESS.
4. THIS ENCLOSURE IS CLASSIFIED AS USE GROUP B, TYPE 5B CONSTRUCTION; PER 1999 BOCA AND IS IN COMPLIANCE WITH 1999 BOCA BUILDING CODE, 1996 INTERNATIONAL MECHANICAL CODE, 2002 NEC AND ILLINOIS ASHRAE 90.1.
5. DESIGN CRITERIA
   WIND LOAD = 125 MPH — FLOOR DEAD LOAD = 35 PSF
   ROOF LIVE LOAD = 100 PSF — WALL DEAD LOAD = 35 PSF
   FLOOR LIVE LOAD = 135 PSF — SNOW LOAD = 60 PSF
   ROOF DEAD LOAD = 45 PSF — SEISMIC EXPOSURE GROUP = III
6. F_c' = 5000 PSI @ 28 DAYS (EQUIPMENT ENCLOSURE)
7. ENCLOSURE AND ASSOCIATED EQUIPMENT IS PROVIDED BY OWNER UNDER SEPARATE CONTRACT. EQUIPMENT ENCLOSURE INFORMATION INDICATED HEREIN IS PROVIDED FOR REFERENCE ONLY AND IS TAKEN FROM MANUFACTURER'S AVAILABLE DATA. REFER TO CIVIL, STRUCTURAL AND ELECTRICAL DRAWINGS FOR WORK TO BE PERFORMED UNDER THIS CONTRACT.
8. PRIOR TO PROJECT CLOSE OUT AND SHELTER INSTALLATION, THE GENERAL CONTRACTOR IS TO CLEAN THE SHELTER FLOOR AND APPLY A STATIC-FREE WAX TO THE FLOORS.

SBA
SBA TOWERS II, LLC
5900 BROKEN SOUND PKWY. NW.
BOCA RATON, FL 33487
PHONE 1-800-487-7483

TERRA CONSULTING GROUP, LTD.
600 Busse Highway
Park Ridge, IL 60068
Ph: 847/698-6400
Fax: 847/698-6401

REVISIONS

NO.	DESCRIPTION	DATE
1	ISSUED FOR REVIEW/PERMIT	01/26/15

SITE 301513

SBA # MI16549-B

WELLS 3

N 28TH ST
ESCANABA, MI 49829

DRAWN BY:	DTE
CHECKED BY:	TAZ
DATE:	01/26/15
PROJECT #:	7595

SHEET TITLE
EQUIPMENT ENCLOSURE PLAN & SECTION

SHEET NUMBER
B-1

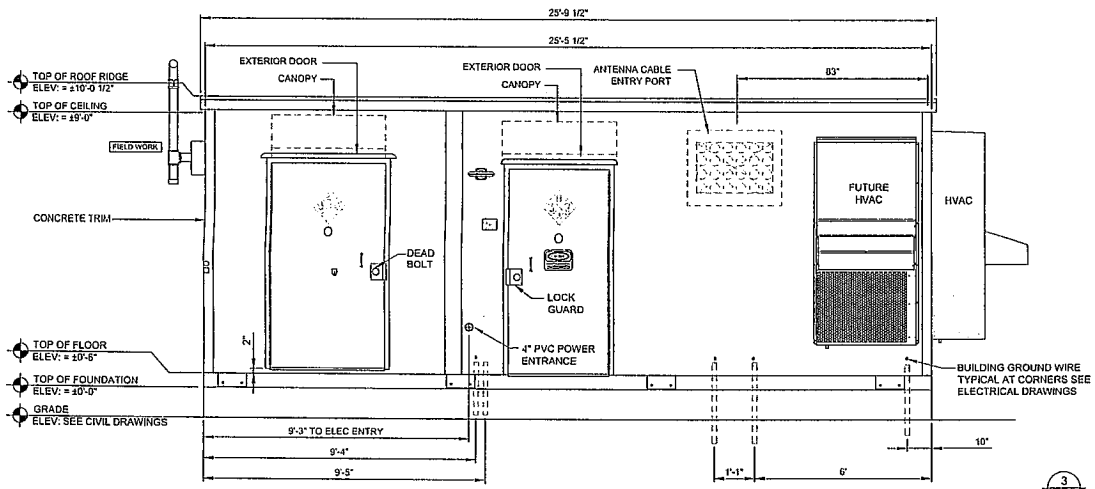

1 ELEVATION-EQUIPMENT ENCLOSURE
SCALE: 1/2" = 1'-0"

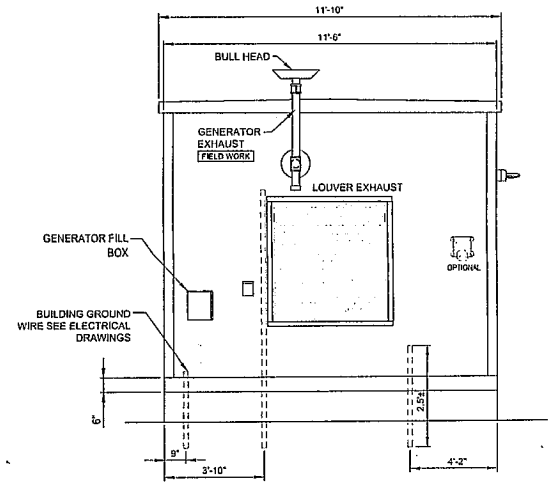

2 ELEVATION-EQUIPMENT ENCLOSURE
SCALE: 1/2" = 1'-0"

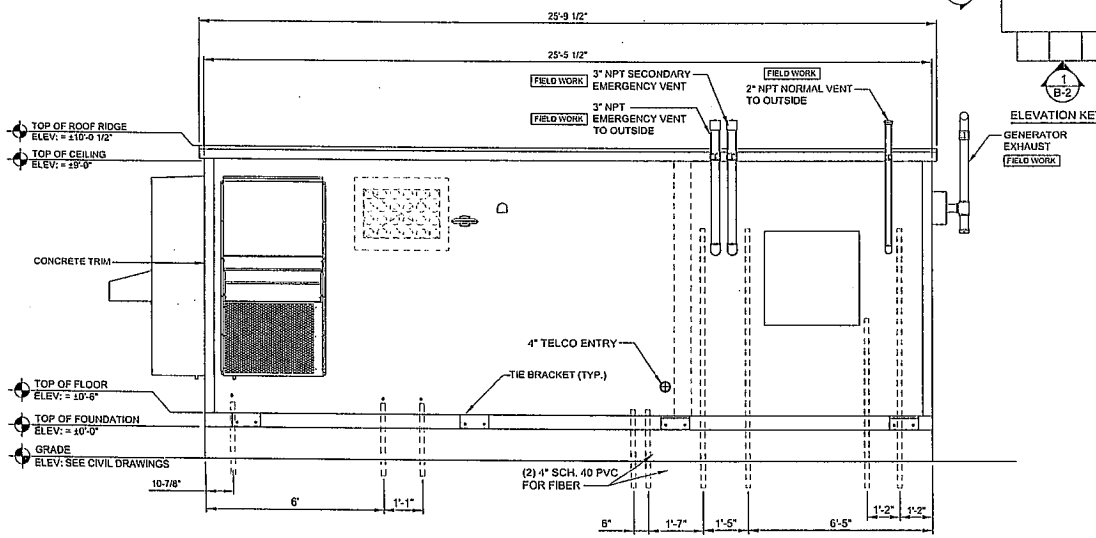

3 ELEVATION-EQUIPMENT ENCLOSURE
SCALE: 1/2" = 1'-0"

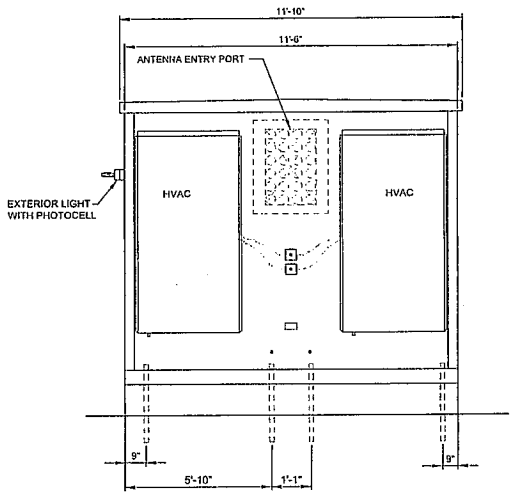

4 ELEVATION-EQUIPMENT ENCLOSURE
SCALE: 1/2" = 1'-0"

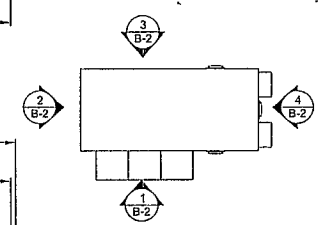

ELEVATION KEY

SBA

SBA TOWERS, INC.
5900 BROKEN SOUND PKWY NW
BOCA RATON, FL 33487
PHONE 1-800-487-7483

TERRA CONSULTING GROUP, LTD.
600 Busse Highway
Park Ridge, IL 60068
Ph: 847/698-6400
Fax: 847/698-6401

REVISIONS

NO.	DESCRIPTION	DATE
-	ISSUED FOR REVIEW/PERMIT	01/26/15

SITE 301513

SBA # MI16549-B

WELLS 3

N 28TH ST
ESCANABA, MI 49829

DRAWN BY:	BTE
CHECKED BY:	TAZ
DATE:	01/26/15
PROJECT #:	7595

SHEET TITLE
EQUIPMENT ENCLOSURE ELEVATIONS

SHEET NUMBER
B-2

ELECTRICAL NOTES

1. ALL WORK IS TO COMPLY WITH THE NATIONAL ELECTRICAL CODE (N.E.C.) AND ANY LOCAL ORDINANCES, CODES, AND ALL OTHER ADMINISTRATIVE AUTHORITIES HAVING JURISDICTION. THE CONTRACTOR SHALL FURNISH AND PAY FOR ALL PERMITS AND RELATED FEES.
2. ALL EQUIPMENT AND MATERIAL FURNISHED AND INSTALLED UNDER THIS CONTRACT SHALL BE UNDERWRITERS LABORATORIES (U.L.) LISTED, NEW, FREE FROM DEFECTS, AND SHALL BE GUARANTEED FOR A PERIOD OF ONE YEAR FROM DATE OF FINAL ACCEPTANCE BY OWNER OR HIS REPRESENTATIVE. SHOULD ANY TROUBLE DEVELOP DURING THIS PERIOD DUE TO FAULTY WORKMANSHIP, MATERIAL OR EQUIPMENT, THE CONTRACTOR SHALL FURNISH ALL NECESSARY MATERIALS AND LABOR TO CORRECT THE TROUBLE WITHOUT COST TO THE OWNER.
3. ALL WORK SHALL BE EXECUTED IN A WORKMAN LIKE MANNER AND SHALL PRESENT A NEAT MECHANICAL APPEARANCE WHEN COMPLETED. THE CONTRACTOR SHALL BE RESPONSIBLE FOR ALL CUTTING AND PATCHING RELATED TO ELECTRICAL WORK, AND SHALL RESTORE ALL EXISTING LANDSCAPING, SPRINKLER SYSTEMS, CONDUITS, WIRING, PIPING, ETC. DAMAGED BY THE ELECTRICAL WORK TO MATCH EXISTING CONDITIONS.
4. ELECTRICAL WORK SHALL INCLUDE, BUT NOT BE LIMITED TO, ALL LABOR, MATERIALS AND EQUIPMENT REQUIRED TO COMPLETE ELECTRICAL POWER AND LIGHTING SYSTEMS, TELEPHONE AND COMMUNICATION SYSTEMS, PANEL BOARDS, CONDUIT, CONTROL WIRING, GROUNDING, ETC. AS INDICATED ON ELECTRICAL DRAWINGS AND/OR AS REQUIRED BY GOVERNING CODES.
5. PRIOR TO INSTALLING ANY ELECTRICAL WORK, THE CONTRACTOR SHALL VISIT THE JOB SITE AND VERIFY EXISTING SITE LOCATIONS AND CONDITIONS AND UTILITY SERVICE REQUIREMENTS OF THE JOB, AND BY REFERENCE TO ARCHITECTURE AND EQUIPMENT SUPPLIERS DRAWINGS. SHOULD THERE BE ANY QUESTION OR PROBLEM CONCERNING THE NECESSARY PROVISIONS TO BE MADE, PROPER DIRECTIONS SHALL BE OBTAINED BEFORE PROCEEDING WITH ANY WORK.
6. PROVIDE POWER AND TELEPHONE TO SERVICE POINTS PER UTILITY COMPANY REQUIREMENTS. CONTRACTOR SHALL CONTACT UTILITY SERVICE PLANNERS AND OBTAIN ALL SERVICE REQUIREMENTS AND INCLUDE COSTS FOR SUCH IN HIS BID.
7. SERVICE EQUIPMENT SHALL HAVE A SHORT CIRCUIT WITHSTAND RATING EQUAL TO OR EXCEEDING THE MAXIMUM AVAILABLE FAULT CURRENT AT THE SUPPLY TERMINAL. THE INSTALLATION SHALL BE FREE FROM ANY SHORT CIRCUITS AND GROUNDS.
8. ALL WIRING SHALL BE COPPER WITH THHN/THWN DUAL RATED 600 VOLTS INSULATION.
9. IN THE EVENT OF ANY CONFLICT OR INCONSISTENCY BETWEEN ITEMS SHOWN ON THE PLANS AND/OR SPECIFICATIONS, THE NOTE, SPECIFICATION OR CODE WHICH PRESCRIBES AND ESTABLISHES THE HIGHEST STANDARD OF PERFORMANCE SHALL PREVAIL.
10. SERVICE CONDUITS SHALL HAVE NO MORE THAN (2)-90° BENDS IN ANY SINGLE RUN. THE CONTRACTOR SHALL PROVIDE PULL BOXES AS NEEDED WHERE CONDUIT REQUIREMENTS EXCEED THESE CONDITIONS.
11. ALL ELECTRICAL EQUIPMENT SHALL BE ANCHORED TO WITHSTAND 100 M.P.H. WIND SPEED AND DESIGNED FOR EXPOSURE C.
12. ALL COAX, POWER AND TELEPHONE SYSTEM CONDUITS SHALL HAVE A MINIMUM 24" RADIUS SWEEPS TO EQUIPMENT, PULLBOXES, MONOPOLE, ETC., UNLESS OTHERWISE NOTED, OR AS REQUIRED BY UTILITY COMPANIES.
13. FUSE TYPE SHALL BE BUSSMAN RKI LOW PEAK FUSE (LPU-RK-100).
14. UPON COMPLETION OF THE JOB, THE CONTRACTOR SHALL FURNISH AS-BUILT DRAWINGS TO THE OWNER.
15. CONTRACTOR TO PROVIDE GUTTER TAP(S) AS REQUIRED.
16. GENERAL GROUNDING CRITERIA (FOR TENANT IMPROVEMENTS): 1ST STEP: GROUND TO EXISTING BUILDING STRUCTURAL STEEL AND TO THE STREET SIDE OF EXISTING WATER METER COLD WATER LINE. THEN TEST GROUNDING RESISTANCE TO WITHIN 1 TO 5 OHMS OVERALL GROUND RESISTANCE. WHERE THE EFFECTIVE RESISTANCE DOES NOT MEET THIS CRITERIA, PROVIDE SUPPLEMENTAL GROUNDING AND RE-TEST UNTIL GROUND RESISTANCE FALLS BELOW THIS LEVEL.
    SUPPLEMENTAL GROUND MAY CONSIST OF ONE OR MORE OF THE FOLLOWING: 1) COUNTERPOISE,
    2) UFER GROUND
    3) GROUND ROD AND/OR GROUND WELL IN EXTREMELY ADVERSE SOIL CONDITIONS.
    WHERE THE EXISTING BUILDING STEEL DOES NOT PROVIDE AN EFFECTIVE GROUND RESISTANCE, THEN THE CONTRACTOR SHALL PROVIDE A SEPARATE GROUND CONDUCTOR FROM ROOF MOUNTED BTS EQUIPMENT LOCATIONS EITHER DOWN THROUGH THE INSIDE OF THE BUILDING OR DOWN THE OUTSIDE OF THE BUILDING, DEPENDING UPON OWNER PREFERENCE.
    WHERE THE GROUND CONDUCTOR FROM THE ROOF MOUNTED EQUIPMENT IS ROUTED IN CONDUIT, THE CONDUIT SHALL BE EFFECTIVELY GROUNDED TO THE GROUND CONDUCTOR AT BOTH ENDS OF THE CONDUIT.
    (MONOPOLE INSTALLATIONS):
    FOR INSTALLATIONS WHERE WOODEN STRUCTURES, TOWERS, CONCRETE SILOS ETC. ARE ENCOUNTERED A SEPARATE DOWNLEAD SHALL BE PROVIDED FROM THE ANTENNAS SEPARATED BY A MINIMUM OF 12 INCHES FROM THE COAXIAL CABLES. THE GROUND CONDUCTOR SHALL BE SECURELY FASTENED TO THE EXTERIOR OF OUTSIDE STRUCTURES WITH NONMETALLIC GROUND STRAPS EVERY 10 FEET. AGAIN, AS FOR TENANT IMPROVEMENT PROJECTS, TEST THE GROUND RESISTANCE FOR MONOPOLE INSTALLATIONS AND PROCEED PER THE ABOVE STEPS.
17. CONTRACTOR TO COLOR PHASE CONDUCTORS BLACK (B PHASE), RED (A PHASE), WHITE (NEUTRAL), AND GREEN (GROUND).
18. ALL ELECTRICAL WORK SHALL BE IN ACCORDANCE WITH APPLICABLE SECTIONS OF THE LOCAL AND STATE BUILDING CODES

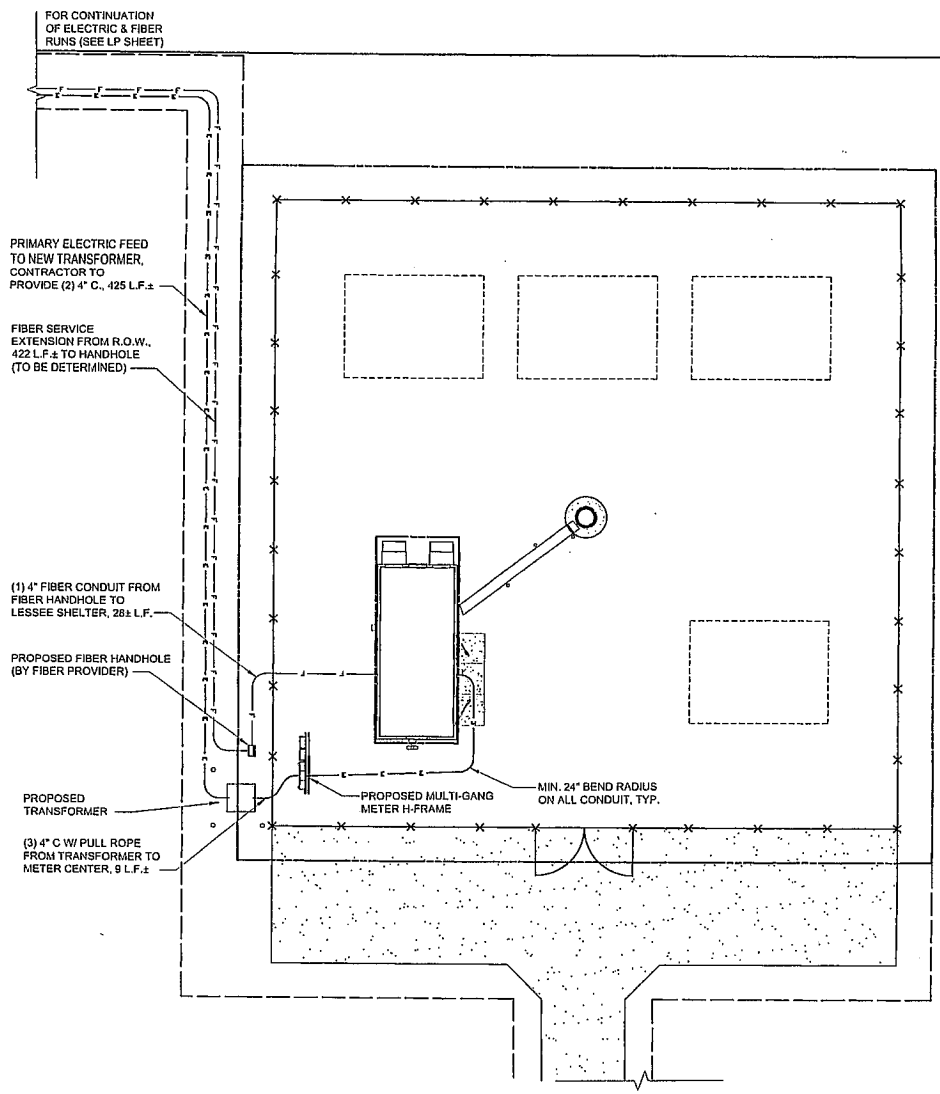

SCALE 1" = 8'

0 4" 8" 16"

24" x 36" PRINTS TO THE FULL SCALE FORMAT. ANY SIZE OTHER THAN THAT IS AT REDUCED SCALE.

3 WORKING DAYS
BEFORE YOU DIG
CALL MISS DIG
1-800-482-7171

UTILITIES:	POWER	PHONE
	T.B.D.	T.B.D.

SBA

SBA TOWERS II, LLC
5500 BROKEN SOUND BLVD. NW
BOCA RATON, FL 33487
PHONE 1-800-487-7483

TERRA CONSULTING GROUP, LTD.
600 Busse Highway
Park Ridge, IL 60068
Ph: 847/698-6400
Fax: 847/698-6401

REVISIONS

NO.	DESCRIPTION:	DATE
-	ISSUED FOR REVIEW/PERMIT	01/26/15

SITE 301513

SBA # MI16549-B

WELLS 3

N 28TH ST
ESCANABA, MI 49829

DRAWN BY:	BTE
CHECKED BY:	TAZ
DATE:	01/26/15
PROJECT #:	7555

SHEET TITLE
UTILITY ROUTING PLAN

SHEET NUMBER
E-1

TYPICAL KEYED GROUNDING NOTES △

1. #2 AWG TNND SOLID BARE COPPER CONDUCTOR 42" BELOW GRADE (TYPICAL) MINIMUM 24" BENDING RADIUS
2. 5/8" x 10' COPPER CLAD GROUND ROD
3. GROUND ALL CORNER POSTS WITH MECHANICAL PIPE CONNECTORS
4. PERIPHERAL GROUND RING SHOULD BE INSTALLED 1'-2' INSIDE THE FENCE LINE, THE TOWER GROUND RING SHOULD BE INSTALLED A MINIMUM TWO FEET OFF OF ANY STRUCTURE
5. 5"Ø 10' LONG COPPERCLAD GROUND ROD WITH INSPECTION WELL, TOP OF GROUND ROD MAX 24" BURY, SEE DETAIL SHEET E-5.
6. INSPECTION WELL #2
7. BOND TOWER TO GROUND SYSTEM WITH CADWELD TYPE VS, 3 LOCATIONS
8. GATE JUMPERS SEE DETAIL ON SHEET E-5
9. PROVIDE AN EXTERNAL #2 TNNCOATED GROUND LEAD FROM GROUND RING TO ALL METAL CABINETS ON UTILITY BACKBOARD (TELCO,ELEXTRIC,BREAKER PANELS, METER RACKS, JUNCTION BOXES, ETC.) SLEEVED IN CONDUIT FROM JUST BELOW GRADE TO SAND CABINETS USING BURNDY TYPE 2 LONG BARREL LUGS WITH NO-OK OR COPPER SHIELD
10. BOND THE #6 GREEN INSULATED CONDUCTOR FROM METER PANEL AND DISCONNECT TO SEPARATE GROUND ROD
11. BOND THE #6 GREEN INSULATED CONDUCTOR FROM TELCO BOX TO SEPARATE GROUND ROD.
12. ENCLOSURE GROUND (TYP.) IN 1/2" DIAMETER SCHEDULE 40 PVC CONDUIT
13. GROUND EQUIPMENT ENCLOSURE HVAC WITH MECHANICAL CLAMP (SEE DETAIL, SHEET E-7).
14. 24" x 30" x 24" FIBER OPTIC HAND HOLE (SEE DETAIL 9, SHEET E-7)
15. 4" x 12" x 1/4" GROUND BAR INSIDE OF HAND HOLE. G.C. TO DRIVE 10' GROUND ROD & CLAMP TO GROUND BAR (SEE DETAIL 9, SHEET E-7)
16. #2 AWG TNND SOLID BARE COPPER CONDUCTOR 42" BELOW GRADE (SEE DETAIL 9, SHEET E-7)
17. MAINTAIN TWO FOOT DISTANCE OFF OF STRUCTURES.
18. GROUND TELEPHONE SERVICE ENTRANCE (SEE DETAIL, SHEET E-7).
19. ELECTRIC METER AND ELECTRIC SERVICE GROUNDING (SEE DETAIL SHEET E-3). COORDINATE ALTERNATE WITH PM
20. GROUND COAXIAL ANTENNA CABLES TO GROUND BAR BY ANTENNA CONTRACTOR TERMINATE CABLES 1'-0" FROM ENCLOSURE AND INSTALL GROUND KITS ON EACH CABLE GROUND.
21. EXOTHERMICALLY WELD COPPER GROUND BAR TAIL TO EXTERIOR HALO GROUND RING (EXOTHERMIC CONNECTION TYPE TA) BY ANTENNA CONTRACTOR. FINAL CONNECTION BY ELECTRICAL CONTRACTOR.
22. 4"X20"X1/4" TNND INSULATED COPPER GROUND BAR, NON ISOLATED WITH 10.0' LONG #2 AWG TNND SOLID COPPER WIRE WELDED TAILS (HARGER GBIT 14420VW)
23. GROUND CABLE WAVEGUIDE BRIDGE (TYP.) BY ELECTRICAL CONTRACTOR.
24. 4"x20"x1/4" TNND INSULATED COPPER GROUND BAR, NON-ISOLATED, WITH 10.0' LONG #2 AWG TNND SOLID COPPER WIRE WELDED TAILS (HARGER GBIT 14420VW)
25. GROUND ANTENNA CABLES TO GROUND BAR AT ANTENNA ELEVATION OF TOWER. GROUND BASE GROUND BAR TO GROUND HALO.
26. BOND PROPOSED TOWER GROUND RING TO PROPOSED GROUND RING WITH #2 AWG TNND SOLID COPPER CONDUCTOR IN 2 LOCATIONS.
27. TWO #2 LEADS FROM THE EGR TO THE MGB LOCATED IN THE SHELTER. CADWELD AT EGR AND DOUBLE HOLE LUGS IN SHELTER.
28. TIE THE SHELTER EGR TO THE OUTER RING VIA #2 BARE TNND COPPER LEADS WITH CADWELD CONNECTIONS.

ELECTRICAL SYMBOLS

- [E] SURFACE ELECTRICAL PANELBOARD
- [M] ELECTRIC SERVICE METER
- [T] TRANSFORMER
- —E— UNDERGROUND ELECTRICAL CONDUIT RUN
- —T— UNDERGROUND TELEPHONE CONDUIT RUN
- —G— SOLID BARE COPPER WIRE #2 AWG TNND MIN. 24" BELOW GRADE (HARPER L-2) OR EQUAL, OR AS APPROVED.
- ⊗ 5/8" DIA X 10'-0" LONG COPPER CLAD GROUND ROD
- ◎ GROUND BAR WITH INSPECTION WELL
- • EXOTHERMIC WELD (CADWELD)
- ▪ MECHANICAL GROUND CONNECTION

CONTRACTOR RESPONSIBLE FOR VERIFYING UTILITIES PRIOR TO ANY EXCAVATION

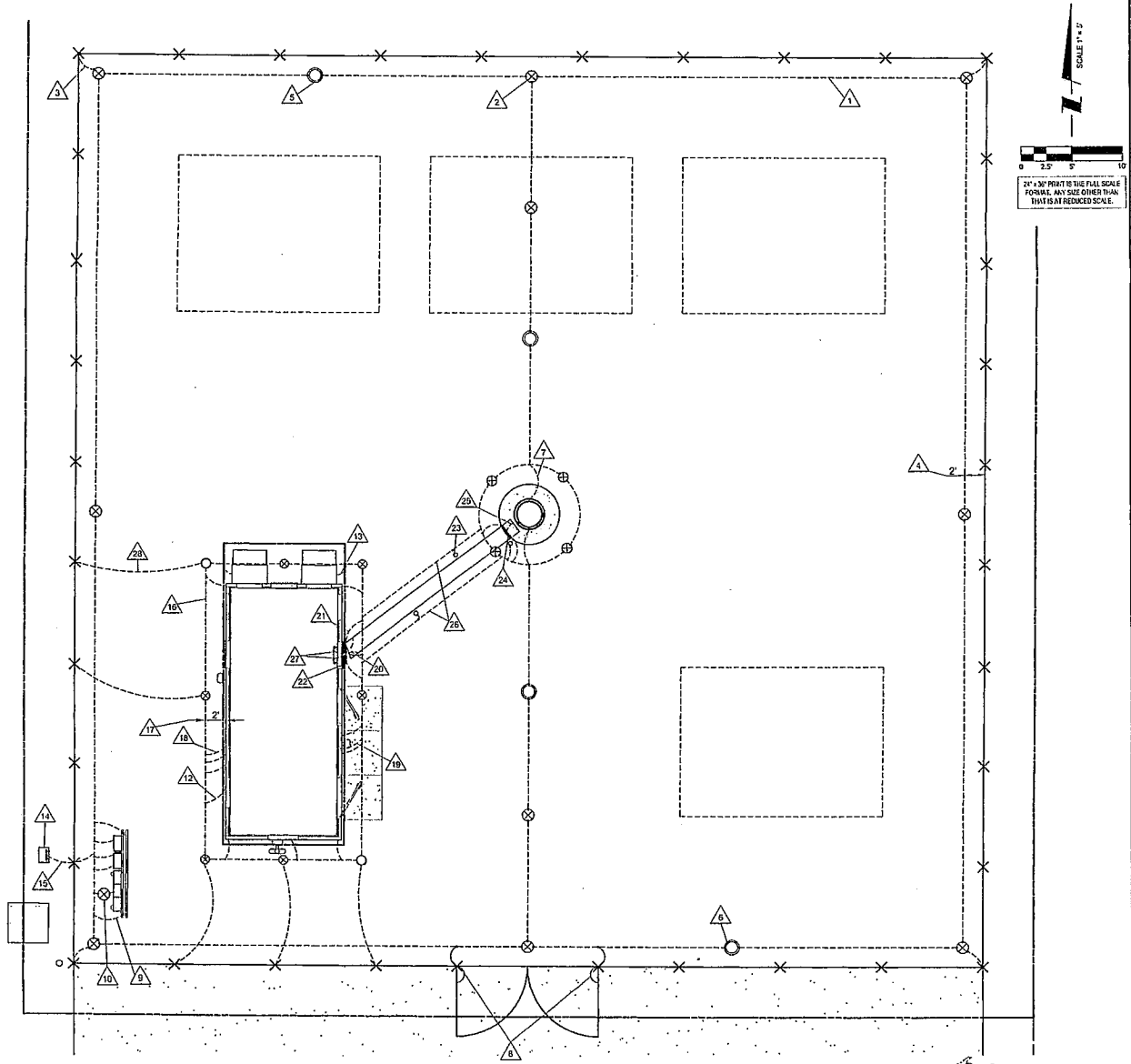

CONTRACTOR RESPONSIBLE TO RETURN SURFACE TO ORIGINAL OR BETTER CONDITION

ALL CONNECTIONS TO GROUND BAR SHALL BE COATED WITH A NON-OXIDIZING COMPOUND

3 WORKING DAYS BEFORE YOU DIG CALL MISS DIG 1-800-482-7171

SBA
SBA TOWERS IV, LLC
5900 BROKEN SOUND PKWY. NW
BOCA RATON, FL 33487
PHONE 1-800-487-7483

TERRA CONSULTING GROUP, LTD.
600 Busse Highway
Park Ridge, Illinois 60068
Ph: 847/698-6400
Fax: 847/698-6401

REVISIONS

NO.	DESCRIPTION	DATE
-	ISSUED FOR REVIEW/PERMIT	01/26/15

SITE 301513

SBA # MI16549-B

WELLS 3

N 28TH ST
ESCANABA, MI 49829

DRAWN BY	BTE
CHECKED BY:	TAZ
DATE:	01/26/15
PROJECT #	7509

SHEET TITLE
SITE GROUNDING PLAN

SHEET NUMBER
E-2

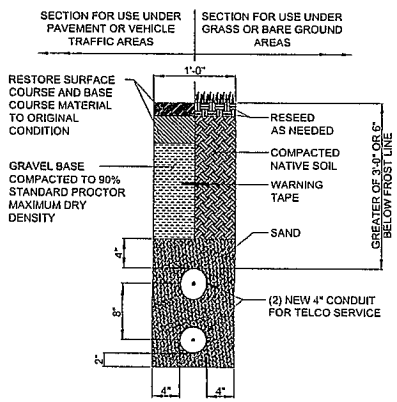

1 TELEPHONE TRENCH DETAIL
N.T.S.

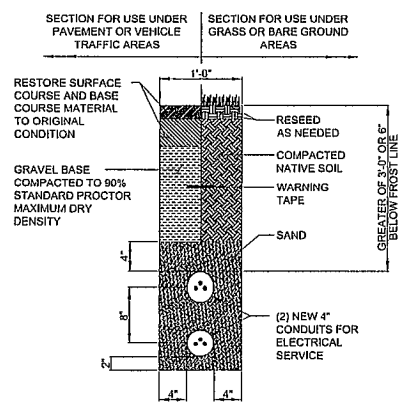

2 ELECTRICAL TRENCH DETAIL
N.T.S.

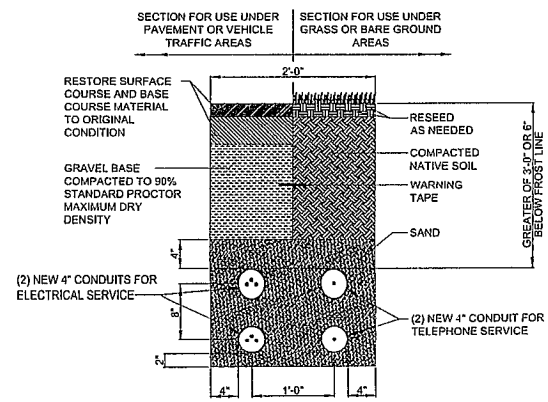

3 JOINT UTILITY TRENCH DETAIL
N.T.S.

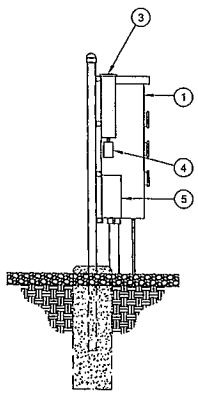

SIDE VIEW

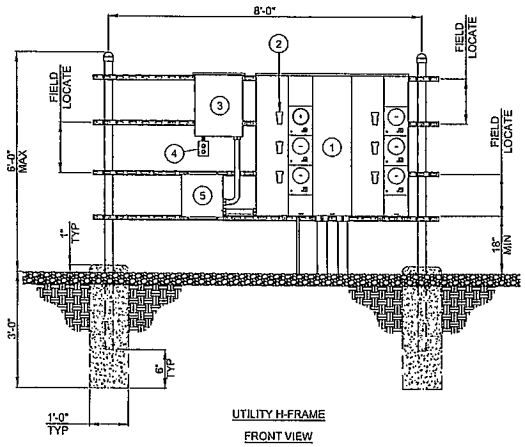

UTILITY H-FRAME
FRONT VIEW

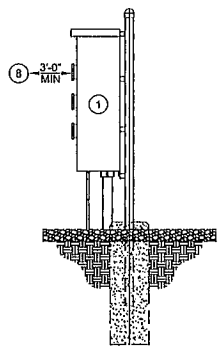

SIDE VIEW

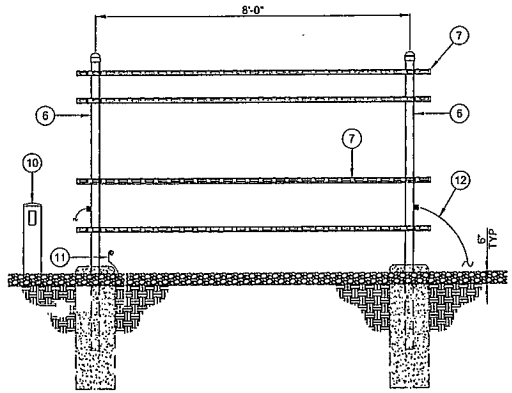

TELCO H-FRAME
REAR VIEW

BALLOON REFERENCE NOTES:

1. 800A, 120/240V, 1 PHASE, 3 WIRE, 6 POSITION METERING CENTER (200A MAX CIRCUIT BREAKER) (SQUARE D METER PAK MPR86200, OR EQUAL)
2. 125A TENANT SERVICE DISCONNECT (SQUARE D CATALOG #QOM2125MVH, OR EQUAL)
3. 125A 120/240V 1 PHASE, 3 WIRE, 12 POSITION LOAD CENTER (SQUARE D QO LOAD CENTER #QO112L125GRB, OR APPROVED EQUAL)
4. 120/240V 1-GANG COMMERCIAL GRADE OUTDOOR ELECTRICAL BOX W/ 20A COMMERCIAL GRADE DUPLEX RECEPTACLE
5. 80kA 120/240V, 1 PHASE, 3 WIRE TRANSIENT VOLTAGE SURGE SUPPRESSER (TESSCO #302065, OR APPROVED EQUAL)
6. 3" NOMINAL GALVANIZED STEEL PIPE WITH PIPE CAP
7. HORIZONTAL SUPPORT MEMBER (UNISTRUT P1000, OR APPROVED EQUAL)
8. CONTRACTOR TO MAINTAIN 3'-0" MINIMUM CLEARANCE FROM METERING CENTER TO NEAREST OBSTRUCTION
9. 4'x4' HOFFMAN BOX FOR TELCO
10. PROPOSED TELCO PEDESTAL (PROVIDED BY AT&T) LOCATED NEXT TO UTILITY POLE IN R.O.W.
11. 6' #6 GROUND WIRE COILED AT POST. CONNECT TO GROUNDING SYSTEM
12. #2 AWG BARE SOLID TINNED COPPER WIRE ROUTED TO GROUNDING SYSTEM (TYP. EACH LEG)

4 UTILITY & TELCO H-FRAME DETAIL
N.T.S.

SBA
SBA TOWERS II LLC
5900 BROKEN SOUND PKWY NW
BOCA RATON, FL 33487
PHONE 1-866-457-7483

TERRA CONSULTING GROUP, LTD.
600 Busse Highway
Bay City, MI 48708
Ph: 847/698-5400
Fax: 847/698-5401

REVISIONS

NO.	DESCRIPTION	DATE
-	ISSUED FOR REVIEW/PERMIT	01/20/15

SITE 301513

SBA # MI16549-B

WELLS 3

N 28TH ST
ESCANABA, MI 49829

DRAWN BY:	BTE
CHECKED BY:	TAZ
DATE:	01/20/15
PROJECT #:	7595

SHEET TITLE
UTILITY DETAILS

SHEET NUMBER
E-3

LOAD PER PHASE (VA)		SBA PANEL SCHEDULE								LOAD PER PHASE (VA)	
		MAIN: 125A MAIN LUGS FEEDER:		VOLTAGE: 120/240V PHASE: 1 WIRE: 3 INTERRUPT RATING: 10 KAIC ENCLOSURE: NEMA 3R							
PHASE										PHASE	
A	B	CIRCUIT DESCRIPTION	BREAKER	WIRE	NO.	NO.	WIRE	BREAKER	CIRCUIT DESCRIPTION	A	B
-	-	DUPLEX RECEPTACLE	20A	#10	1	2	-	-	SPARE	-	-
-	-	SPARE	-	-	3	4	-	-	SPARE	-	-
-	-	SPARE	-	-	5	6	-	-	SPARE	-	-
-	-	SPARE	-	-	7	8	-	-	SPARE	-	-
-	-	SPARE	-	-	9	10	-	-	SPARE	-	-
-	-	SPARE	-	-	11	12	-	-	SPARE	-	-

1. SERVICE BOND IS TO BE MADE BY DEVICES (STRAPS, SCREWS, ETC.) SUPPLIED BY EQUIPMENT MANUFACTURER. IF NO SUCH DEVICE IS SUPPLIED, BOND IS TO BE MADE IN ACCORDANCE WITH NEC ARTICLE 250.
2. CONDUCTOR OVERCURRENT PROTECTION DEVICES ARE SELECTED IN ACCORDANCE WITH NEC ARTICLE 240-3.
   CONDUCTOR SIZING IS SELECTED FROM NEC ARTICLE 310-16.
3. CONDUCTOR OVERCURRENT PROTECTION DEVICES ARE SELECTED IN ACCORDANCE WITH NEC ARTICLE 240-3.
   CONDUCTOR SIZING IS SELECTED FROM NEC ARTICLE 310-16.
4. ALL LUGS THAT HOLD MORE THAN ONE WIRE SHALL BE LISTED FOR MULTI-BARRELL CONNECTIONS.
5. ALL CONDUCTORS SHALL BE INSULATED THHN WIRE.

1 LOAD CENTER PANEL SCHEDULE & NOTES
N.T.S.

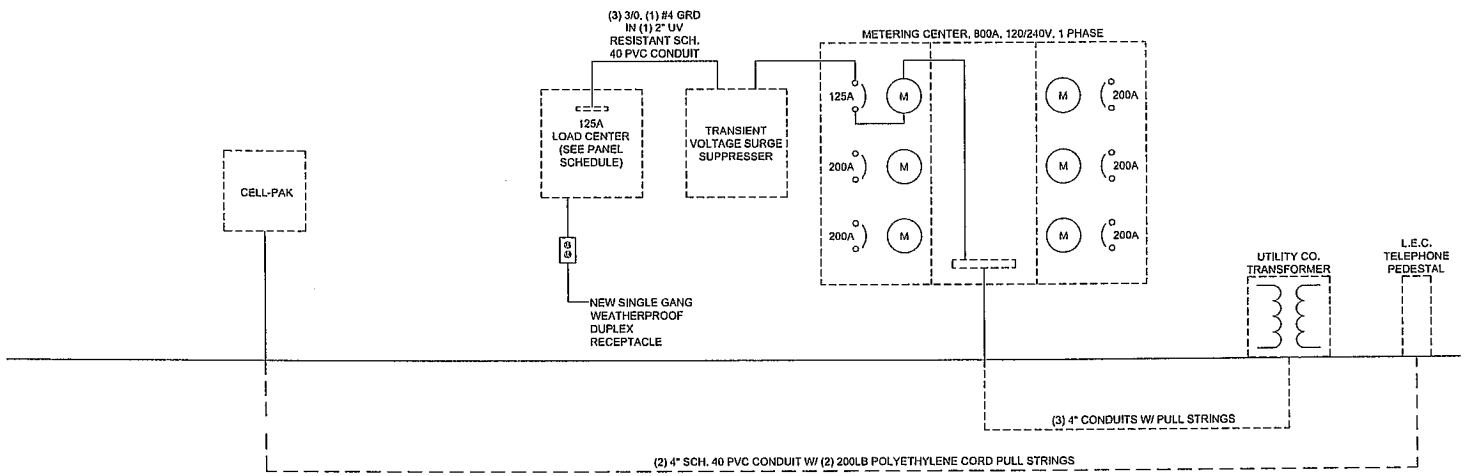

2 ELECTRICAL SINGLE-LINE DIAGRAM
N.T.S.

SBA

SBA TOWERS V, LLC
5900 BROKEN SOUND PKWY NW
BOCA RATON, FL 33487
PHONE 1-800-487-7483

TERRA CONSULTING GROUP, LTD.
600 Busse Highway
Park Ridge, IL 60068
Ph: 847/698-6400
Fax: 847/698-6401

REVISIONS		
NO.	DESCRIPTION	DATE
-	ISSUED FOR REVIEW/PERMIT	01/26/15

SITE 301513

SBA # MI16549-B

WELLS 3

N 28TH ST
ESCANABA, MI 49829

DRAWN BY:	BTE
CHECKED BY:	TAZ
DATE:	01/26/15
PROJECT #:	7595

SHEET TITLE
SINGLE LINE DIAGRAM & PANEL SCHEDULE

SHEET NUMBER
E-4

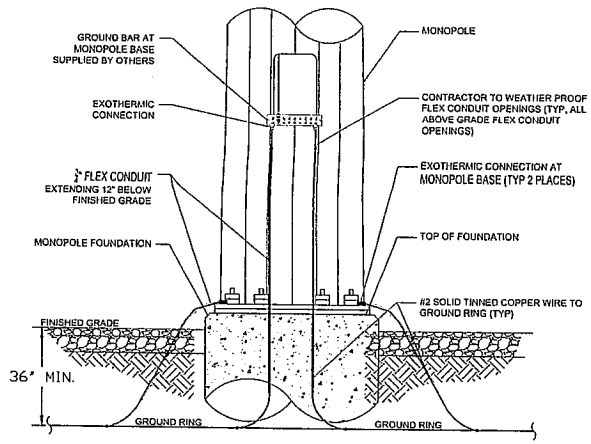

1 GROUNDING @ TOWER BASE
N.T.S.

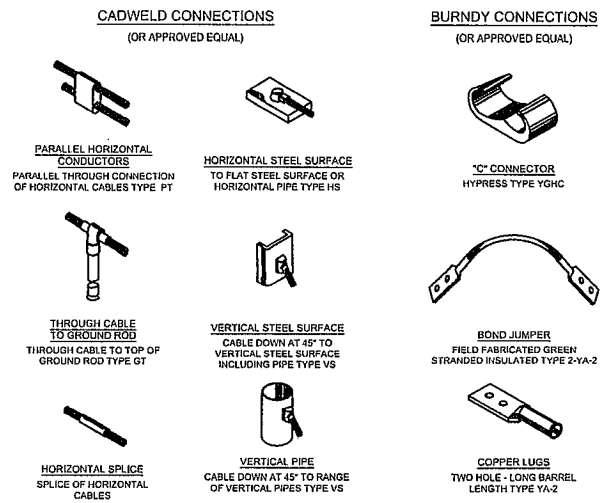

2 TYPICAL WELDING CONNECTIONS
N.T.S.

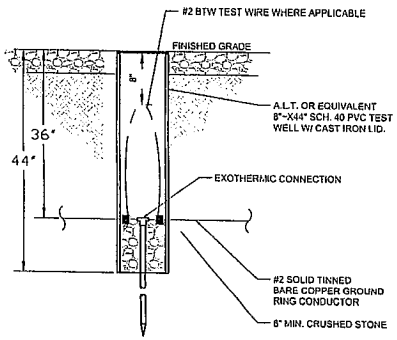

3 ACCESS WELL DETAIL
N.T.S.

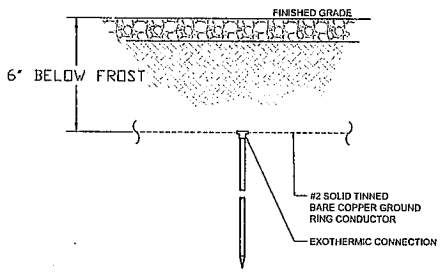

4 GROUNDING ROD DETAIL
N.T.S.

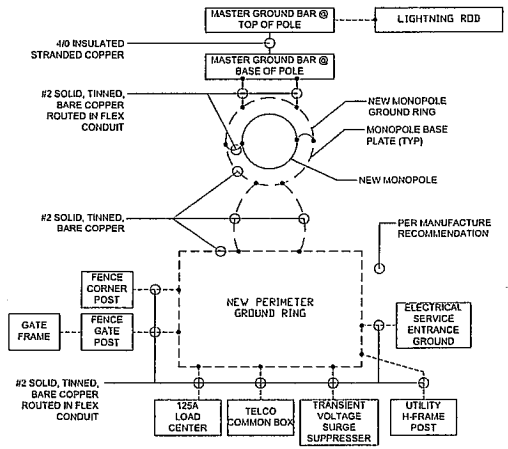

5 GROUNDING SCHEMATIC
N.T.S.

SBA
SBA TOWERS II, LLC
5900 BROKEN SOUND PKWY. NW
BOCA RATON, FLORIDA 33487
PHONE 1-800-487-7483

TERRA CONSULTING GROUP, LTD.
600 Busse Highway
Park Ridge, IL 60068
Ph: 847/698-6400
Fax: 847/698-6401

REVISIONS

NO.	DESCRIPTION	DATE
-	ISSUED FOR REVIEW/PERMIT	01/20/15

SITE 301513

SBA # MI16549-B

WELLS 3

N 28TH ST
ESCANABA, MI 49829

DRAWN BY:	BTE
CHECKED BY:	TAZ
DATE:	01/20/15
PROJECT #:	7595

SHEET TITLE
ELECTRICAL & GROUNDING DETAILS

SHEET NUMBER
E-5

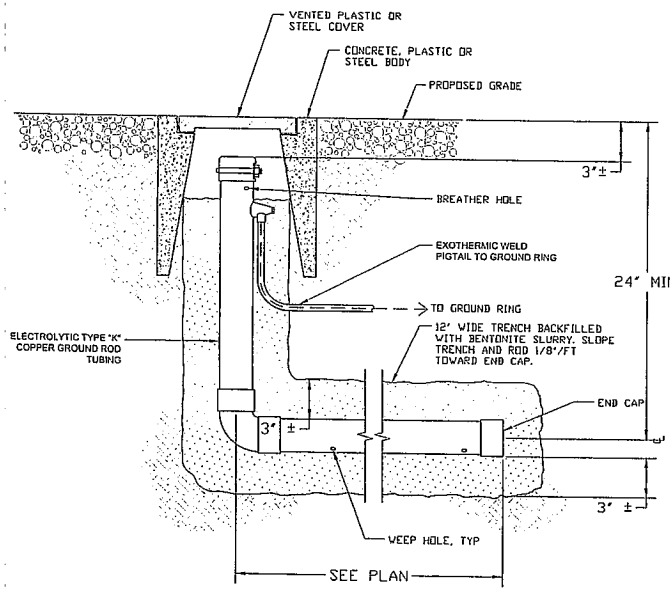

1 XIT CHEMICAL GROUND DETAIL HORIZONTAL
(WHEN REQUIRED) N.T.S.

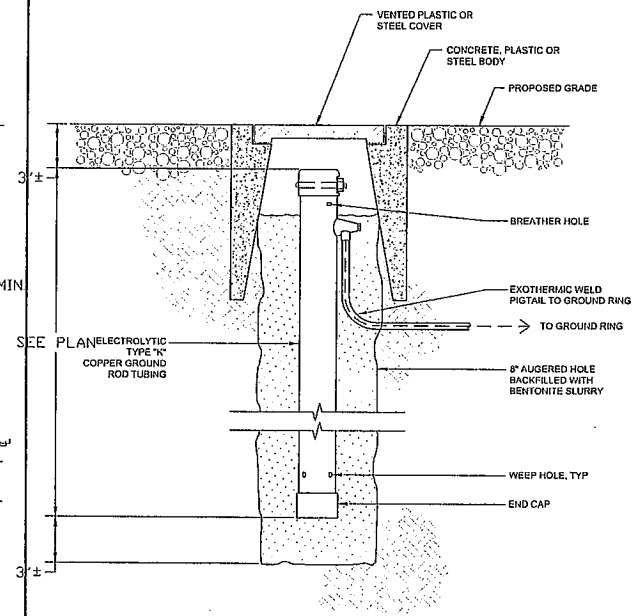

2 XIT CHEMICAL GROUND DETAIL VERTICAL
(WHEN REQUIRED) N.T.S.

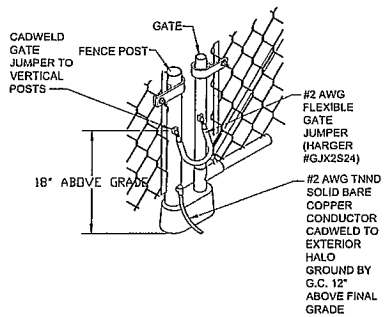

3 CORNER AND GATE FENCE POST DETAIL
NTS

SBA
SBA TOWERS, LLC
5900 BROKEN SOUND BLVD. NW.
BOCA RATON, FL 33487
PHONE 1-800-487-7483

TERRA CONSULTING GROUP, LTD.
600 Busse Highway
Park Ridge, IL 60068
Phone: 847/698-6400
Fax: 847/698-6401

REVISIONS

NO.	DESCRIPTION	DATE
1	ISSUED FOR REVIEW/PERMIT	01/26/15

SITE 301513

SBA # MI16549-B

WELLS 3

N 28TH ST
ESCANABA, MI 49829

DRAWN BY:	BTE
CHECKED BY:	TAZ
DATE:	01/26/15
PROJECT #:	7555

SHEET TITLE
ELECTRICAL & GROUNDING DETAILS

SHEET NUMBER
E-6

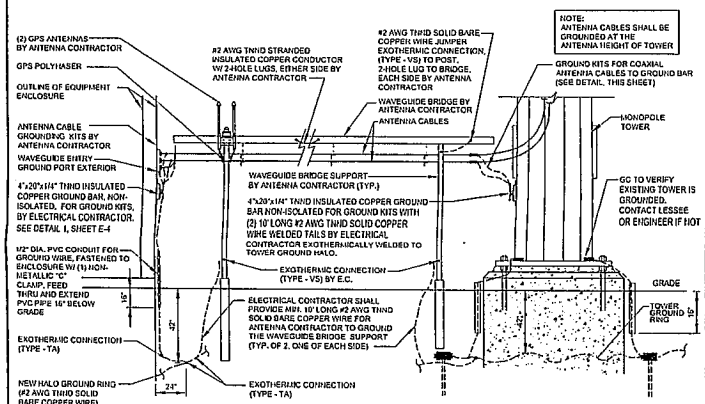

1 ANTENNA CABLE AND WAVEGUIDE BRIDGE GROUNDING DETAIL
N.T.S.

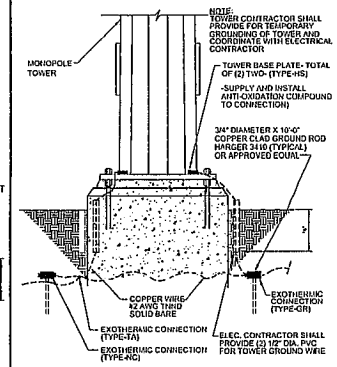

1A PROPOSED MONOPOLE TOWER GROUNDING DETAIL
N.T.S.

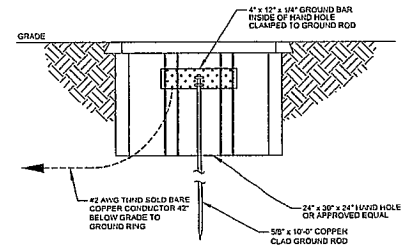

9 HANDHOLE GROUNDING DETAIL
N.T.S.

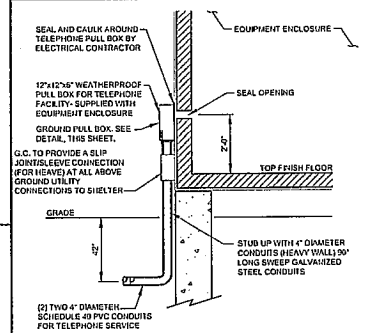

2 TELEPHONE SERVICE ENTRANCE
N.T.S.

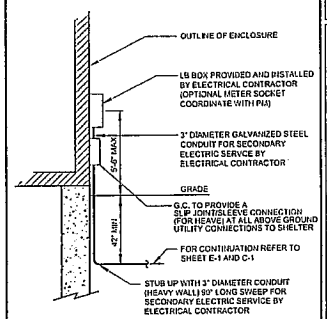

3 UNDERGROUND ELEC. SERVICE DETAIL
N.T.S.

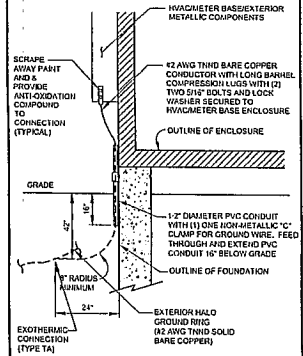

4 COMPONETS GROUNDING DETAIL
N.T.S.

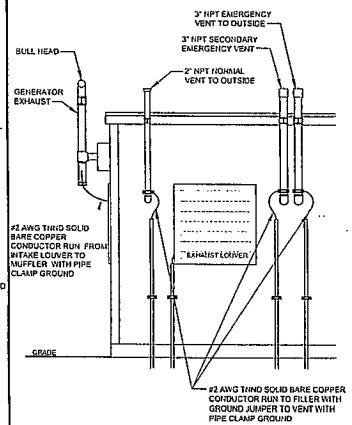

5 EQUIPMENT ENCLOSURE GROUNDING
N.T.S.

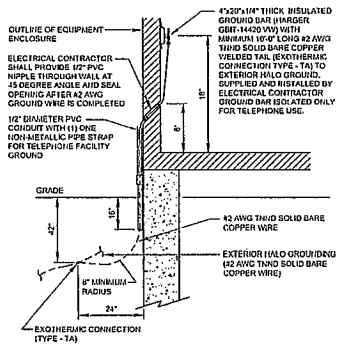

6 TELCO FACILITY GROUND
N.T.S.

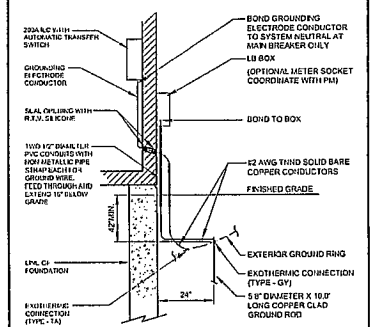

7 ELECTRIC SERVICE GROUNDING DETAIL
N.T.S.

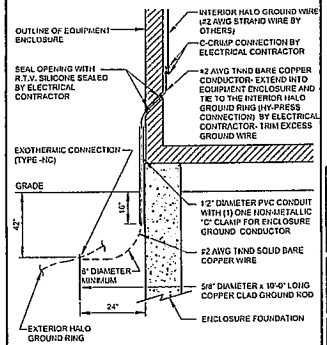

8 ENCLOSURE GROUNDING DETAIL
N.T.S.

SBA
SBA TOWERS V, LLC
5900 BROKEN SOUND PKWY NW
BOCA RATON, FL 33487
PHONE 1-800-487-7483

TERRA CONSULTING GROUP, LTD.
600 Busse Highway
Park Ridge, IL 60068
Ph: 847/698-5400
Fax: 847/698-5401

REVISIONS			
NO	DESCRIPTION	DATE	
-	ISSUED FOR REVIEW/PERMIT	01/20/15	

SITE 301513

SBA # MI16549-B

WELLS 3

N 28TH ST
ESCANABA, MI 49829

DRAWN BY:	BTE
CHECKED BY:	TAZ
DATE:	01/20/15
PROJECT #:	7595

SHEET TITLE
VZW ELECTRICAL AND GROUNDING DETAILS

SHEET NUMBER
E-7

GENERAL NOTES

1. ALL REFERENCES TO OWNER HEREIN SHALL BE CONSTRUED TO MEAN SBA OR IT'S DESIGNATED REPRESENTATIVE.
2. ALL WORK PRESENTED ON THESE DRAWINGS MUST BE COMPLETED UNLESS NOTED OTHERWISE. THE CONTRACTOR MUST HAVE CONSIDERABLE EXPERIENCE IN PERFORMANCE OF WORK SIMILAR TO THAT DESCRIBED HEREIN. BY ACCEPTANCE OF THIS ASSIGNMENT, THE CONTRACTOR IS ATTESTING THAT HE DOES HAVE SUFFICIENT EXPERIENCE AND ABILITY. THAT HE IS KNOWLEDGEABLE OF THE WORK TO BE PERFORMED AND THAT HE IS LICENSED AND PROPERLY REGISTERED TO DO THIS WORK IN THE STATE AND/OR COUNTY IN WHICH IT IS TO BE PERFORMED.
3. UNLESS SHOWN OR NOTED OTHERWISE ON THE CONTRACT DRAWINGS, OR IN THE SPECIFICATIONS, THE FOLLOWING NOTES SHALL APPLY TO THE MATERIALS LISTED HEREIN, AND TO THE PROCEDURES TO BE USED ON THIS PROJECT.
4. ALL HARDWARE ASSEMBLY MANUFACTURER'S INSTRUCTIONS SHALL BE FOLLOWED EXACTLY AND SHALL SUPERCEDE ANY CONFLICTING NOTES ENCLOSED HEREIN.
5. IT IS THE CONTRACTOR'S SOLE RESPONSIBILITY TO DETERMINE ERECTION PROCEDURE AND SEQUENCE TO INSURE THE SAFETY OF THE STRUCTURE AND ITS COMPONENT PARTS DURING ERECTION AND/OR FIELD MODIFICATIONS. THIS INCLUDES, BUT IS NOT LIMITED TO, THE ADDITION OF WHATEVER TEMPORARY BRACING, GUYS OR TIE DOWNS THAT MAY BE NECESSARY. SUCH MATERIAL SHALL BE REMOVED AND SHALL REMAIN THE PROPERTY OF THE CONTRACTOR AFTER COMPLETION OF THE PROJECT.
6. ALL DIMENSIONS, ELEVATIONS AND EXISTING CONDITIONS SHOWN ON THE DRAWINGS SHALL BE FIELD VERIFIED BY THE CONTRACTOR AND THE TESTING AGENCY PRIOR TO BEGINNING ANY MATERIALS ORDERING, FABRICATION OR CONSTRUCTION WORK ON THIS PROJECT. ANY DISCREPANCIES SHALL BE IMMEDIATELY BROUGHT TO THE ATTENTION OF THE OWNER AND THE OWNER'S ENGINEER. THE DISCREPANCIES MUST BE RESOLVED BEFORE THE CONTRACTOR IS TO PROCEED WITH THE WORK. THE CONTRACT DOCUMENTS DO NOT INDICATE THE METHOD OF CONSTRUCTION. THE CONTRACTOR SHALL SUPERVISE AND DIRECT THE WORK AND SHALL BE SOLELY RESPONSIBLE FOR ALL CONSTRUCTION MEANS, METHODS, TECHNIQUES, SEQUENCES AND PROCEDURES, OBSERVATION VISITS TO THE SITE BY THE OWNER AND/OR THE ENGINEER SHALL NOT INCLUDE INSPECTION OF THE PROTECTIVE MEASURES OR THE CONSTRUCTION PROCEDURES.
7. ALL MATERIALS AND EQUIPMENT FURNISHED SHALL BE NEW AND OF GOOD QUALITY, FREE FROM FAULTS AND DEFECTS AND IN CONFORMANCE WITH THE CONTRACT DOCUMENTS. ANY AND ALL SUBSTITUTIONS MUST BE PROPERLY APPROVED AND AUTHORIZED IN WRITING BY THE OWNER AND ENGINEER PRIOR TO INSTALLATION. THE CONTRACTOR SHALL FURNISH SATISFACTORY EVIDENCE AS TO THE KIND AND QUALITY OF THE MATERIALS AND EQUIPMENT BEING SUBSTITUTED.
8. THE CONTRACTOR SHALL BE RESPONSIBLE FOR INITIATING, MAINTAINING AND SUPERVISING ALL SAFETY PRECAUTIONS AND PROGRAMS IN CONNECTION WITH THE WORK. THE CONTRACTOR IS RESPONSIBLE FOR INSURING THAT THIS PROJECT AND RELATED WORK COMPLIES WITH ALL APPLICABLE LOCAL, STATE AND FEDERAL SAFETY CODES AND REGULATIONS GOVERNING THIS WORK.
9. ALL WORK SHALL BE COMPLETED IN ACCORDANCE WITH THE LATEST EDITION OF THE LOCAL BUILDING CODE.
10. ALL PROPOSED CELLULAR EQUIPMENT AND FIXTURES SHALL BE FURNISHED BY OWNER FOR INSTALLATION BY THE CONTRACTOR, UNLESS SPECIFICALLY NOTED OTHERWISE HEREIN.
11. ACCESS TO THE PROPOSED WORK SITE MAY BE RESTRICTED. THE CONTRACTOR SHALL COORDINATE INTENDED CONSTRUCTION ACTIVITY, INCLUDING WORK SCHEDULE AND MATERIALS ACCESS WITH THE RESIDENT LEASING AGENT FOR APPROVAL.
12. RADIO EQUIPMENT INSTALLATION SHALL BE IN ACCORDANCE WITH THE MANUFACTURER'S SPECIFICATIONS.

STRUCTURAL NOTES

1. DESIGN REQUIREMENTS PER LOCAL BUILDING CODE AND THE E1A/TIA-222-G STRUCTURAL STANDARDS FOR STEEL ANTENNAS TOWERS AND SUPPORTING STRUCTURES.
2. STRUCTURAL STEEL SHALL CONFORM TO THE LATEST EDITION OF A.I.S.C. SPECIFICATIONS FOR STRUCTURAL STEEL BUILDINGS-ALLOWABLE STRESS DESIGN AND PLASTIC DESIGN INCLUDING THE COMMENTARY AND THE A.I.S.C. CODE OF STANDARD PRACTICE.
3. STRUCTURAL STEEL PLATES AND SHAPES SHALL CONFORM TO ASTM A36. ALL STRUCTURAL STEEL PIPES SHALL CONFORM TO ASTM A53 GRADE B. ALL STRUCTURAL STEEL TUBING SHALL CONFORM TO ASTM A500 GRACE B. ALL STRUCTURAL STEEL COMPONENTS AND FABRICATED ASSEMBLIES SHALL BE HOT DIP GALVANIZED AFTER FABRICATION.
4. WELDING SHALL BE IN ACCORDANCE WITH THE AMERICAN WELDING SOCIETY (AWS) D.1.1-96. STRUCTURAL WELDING CODE-STEEL WELD ELECTRODES SHALL BE E70XX.
5. ALL COAXIAL CABLE CONNECTORS AND TRANSMITTER EQUIPMENT SHALL BE AS SPECIFIED BY THE OWNER AND IS NOT INCLUDED IN THESE CONSTRUCTION DOCUMENTS. THE CONTRACTOR SHALL FURNISH ALL CONNECTION HARDWARE REQUIRED TO SECURE THE CABLES. CONNECTION HARDWARE SHALL BE STAINLESS STEEL.
6. NORTH ARROW SHOWN ON PLANS REFERS TO TRUE NORTH. CONTRACTOR SHALL VERIFY NORTH AND INFORM OWNER OF ANY DISCREPANCY BEFORE STARTING CONSTRUCTION.
7. ALL CAST IN PLACE CONCRETE SHALL BE MIXED AND PLACED IN ACCORDANCE WITH THE REQUIREMENTS OF ACI 318 AND ACI 301, AND SHALL HAVE A 28 DAY MINIMUM COMPRESSIVE STRENGTH OF 3000 PSI (U.O.N.). CONCRETE SHALL BE PLACED AGAINST UNDISTURBED SOIL UNLESS OTHERWISE NOTED. MINIMUM CONCRETE COVER SHALL BE 3 INCHES UNLESS OTHERWISE NOTED.
8. ALL REINFORCING STEEL SHALL CONFORM TO ASTM 615 GRADE 80, DEFORMED BILLET STEEL BARS. WELDED WIRE FABRIC REINFORCING SHALL CONFORM TO ASTM A185.
9. THE FABRICATION AND ERECTION OF STRUCTURAL STEEL SHALL CONFORM TO THE LATEST A.I.S.C. SPECIFICATIONS.
10. ALL CONNECTIONS NOT FULLY DETAILED ON THESE PLANS SHALL BE DETAILED BY THE STEEL FABRICATOR IN ACCORDANCE WITH A.I.S.C. SPECIFICATIONS.
11. HOT-DIP GALVANIZE ITEMS SPECIFIED TO BE ZINC-COATED. AFTER FABRICATION WHERE PRACTICAL. GALVANIZING: ASTM A 123, ASTM A 153/A 153M OR ASTM A 653/A 653M, G90, AS APPLICABLE.
12. REPAIR DAMAGED SURFACES WITH GALVANIZING REPAIR METHOD AND PAINT' CONFORMING TO ASTM A 780 OR BY APPLICATION OF STICK OR THICK PASTE MATERIAL SPECIFICALLY DESIGNED FOR REPAIR OF GALVANIZING. CLEAN AREAS TO BE REPAIRED, AND REMOVE SLAG FROM WELDS. HEAT SURFACES TO WHICH STICK OR PASTE MATERIAL IS APPLIED WITH A TORCH TO A TEMPERATURE SUFFICIENT TO MELT THE METALLICS. IN STICK OR PASTE, SPREAD MOLTEN MATERIAL UNIFORMLY OVER SURFACES TO BE COATED AND WIPE OFF EXCESS MATERIAL.
13. CONTRACTOR SHALL FOLLOW THE MANUFACTURER'S INSTRUCTIONS/ SPECIFICATIONS IF NO INFORMATION IS CONTAINED IN THESE PLANS OR IF THE MANUFACTURER'S SPECIFICATIONS ARE STRICTER.

PERMITS

1. CONTRACTOR SHALL SECURE ALL NECESSARY PERMITS FOR THIS PROJECT FROM ALL APPLICABLE GOVERNMENTAL AGENCIES. (NOT SUPPLIED BY OWNER)
2. ANY PERMITS WHICH MUST BE OBTAINED SHALL BE THE CONTRACTORS RESPONSIBILITY. THE CONTRACTOR SHALL BE RESPONSIBLE FOR ABIDING BY ALL CONDITIONS AND REQUIREMENTS OF THE PERMITS. (NOT SUPPLIED BY OWNER)
3. ALL WORK SHALL BE IN ACCORDANCE WITH LOCAL CODES AND THE LATEST APPLICABLE CODES AND STANDARDS.
4. THE CONTRACTOR SHALL NOTIFY THE APPLICABLE JURISDICTIONAL (STATE, COUNTY, OR CITY) ENGINEER 24 HOURS PRIOR TO THE BEGINNING OF CONSTRUCTION.
5. CONTRACTOR RESPONSIBLE FOR CLOSING AND FILING ALL PERMITS ASSOCIATED WITH SITE.

UTILITIES

1. CONTRACTOR SHALL CONTACT A SUBSURFACE UTILITY LOCATOR FOR LOCATION OF EXISTING UTILITIES PRIOR TO COMMENCEMENT OF ANY CONSTRUCTION ACTIVITIES.
LOCATION OF EXISTING SEWER, WATER LINES, GAS LINES, CONDUITS OR OTHER STRUCTURES ACROSS, UNDERNEATH, OR OTHERWISE ALONG THE LINE OF PROPOSED WORK ARE NOT NECESSARILY SHOWN ON THE PLANS, AND IF SHOWN ARE ONLY APPROXIMATELY CORRECT. CONTRACTOR ASSUMES SOLE RESPONSIBILITY FOR VERIFYING LOCATION AND ELEVATION OF ALL UNDERGROUND UTILITIES (INCLUDING TEST PITS BY HAND IF NECESSARY) IN AREAS OF CONSTRUCTION PRIOR TO STARTING WORK. CONTACT ENGINEER IMMEDIATELY IF LOCATION OR ELEVATION IS DIFFERENT FROM THAT SHOWN ON THE PLANS, OR IF THERE APPEARS TO BE A CONFLICT.
2. CONTRACTOR SHALL COORDINATE ALL UTILITY CONNECTIONS WITH APPROPRIATE UTILITY OWNERS AND CONSTRUCTION MANAGER.
3. DAMAGE BY THE CONTRACTOR TO UTILITIES OR PROPERTY OF OTHERS, INCLUDING EXISTING PAVEMENT AND OTHER SURFACES DISTURBED BY THE CONTRACTOR DURING CONSTRUCTION SHALL BE REPAIRED TO PRE CONSTRUCTION CONDITIONS BY THE CONTRACTOR AT NO ADDITIONAL COST TO THE CLIENT. FOR GRASSED AREAS, SEED AND MULCH SHALL BE ACCEPTABLE..
4. THE CONTRACTOR SHALL COORDINATE WITH THE OWNER THE REQUIREMENTS FOR AND LIMITS OF OVERHEAD AND/OR UNDERGROUND ELECTRICAL SERVICE.
5. THE CONTRACTOR SHALL COORDINATE THE LOCATION OF NEW UNDERGROUND TELEPHONE SERVICE WITH THE TELEPHONE UTILITY AND THE OWNER'S REQUIREMENTS.
6. ALL UNDERGROUND UTILITIES SHALL BE INSTALLED AND TESTED SATISFACTORY PRIOR TO COMMENCING ANY PAVING OPERATIONS WHERE SUCH UTILITIES ARE WITHIN THE LIMITS OF PAVEMENT.

GRADING

1. THE CONTRACTOR SHALL REWORK (DRY, SCARIFY, ETC...) ALL MATERIAL NOT SUITABLE FOR SUB GRADE IN ITS PRESENT STATE. IF THE MATERIAL, AFTER REWORKING, REMAINS UNSUITABLE THEN THE CONTRACTOR SHALL UNDERCUT THIS MATERIAL AND REPLACE WITH APPROVED MATERIAL AT HIS EXPENSE. ALL SUB GRADES SHALL BE PROOF ROLLED WITH A FULLY LOADED TANDEM AXLE DUMP TRUCK PRIOR TO PAVING. ANY SOFT MATERIAL SHALL BE REWORKED OR REPLACED.
2. THE CONTRACTOR IS REQUIRED TO MAINTAIN ALL DITCHES, PIPES, AND OTHER DRAINAGE STRUCTURES FREE FROM OBSTRUCTION UNTIL WORK IS ACCEPTABLE BY THE OWNER. THE CONTRACTOR IS RESPONSIBLE FOR ANY DAMAGES CAUSED BY FAILURE TO MAINTAIN DRAINAGE STRUCTURES IN OPERABLE CONDITION.
3. ALL MATERIALS AND WORKMANSHIP SHALL BE WARRANTED FOR ONE (1) YEAR FROM DATE OF ACCEPTANCE.
4. ALL DIMENSIONS SHALL BE VERIFIED WITH THE PLANS (LATEST REVISION) PRIOR TO COMMENCING CONSTRUCTION. NOTIFY THE OWNER IMMEDIATELY IF DISCREPANCIES ARE DISCOVERED. THE CONTRACTOR SHALL HAVE A SET OF APPROVED PLANS AVAILABLE AT THE SITE AT ALL TIMES WHEN WORK IS BEING PRE FORMED. A DESIGNATED RESPONSIBLE EMPLOYEE SHALL BE AVAILABLE FOR CONTACT BY GOVERNING AGENCY INSPECTORS.

PAINTING

1. CONTRACTOR TO COORDINATE PAINTING REQUIREMENTS WITH OWNER.
2. PAINT COLORS SHALL BE SELECTED TO MATCH EXISTING COLORS AND TEXTURES.
3. PROVIDE THE BEST QUALITY GRADE OF COATINGS AS REGULARLY MANUFACTURED BY APPROVED PAINT MATERIAL MANUFACTURERS. MATERIALS NOT DISPLAYING THE MANUFACTURER'S IDENTIFICATION AS A STANDARD, BEST-GRADE PRODUCT WILL NOT BE ACCEPTABLE.
4. PROVIDE UNDERCOAT PAINT PRODUCED BY THE SAME MANUFACTURER AS THE FINISH COATS. USE ONLY THINNERS APPROVED BY THE PAINT MANUFACTURER AND USE ONLY WITHIN RECOMMENDED LIMITS.
5. COMPLETELY COVER TO PROVIDE AN OPAQUE, SMOOTH SURFACE OF UNIFORM FINISH, COLOR, APPEARANCE, AND COVERAGE. CLOUDINESS, SPOTTINGS, HOLIDAYS, LAPS, BRUSH MARKS, RUNS, SAGS, ROPINESS, OR OTHER SURFACE IMPERFECTIONS WILL NOT BE ACCEPTABLE.

FERROUS METALS
SHOP PRIMED
TOUCH-UP COAT - RED OXIDE METAL PRIMER
FINISH COATS - SEMI-GLOSS-ALKYD ENAMEL

SBA CONSTRUCTION REQUIREMENTS

1. AWARDED CONTRACTOR WILL BE REQUIRED TO SIGN AND RETURN A COPY OF AN AWARD LETTER FOR SBA'S FILE.
2. CONTRACTOR WILL BE REQUIRED TO PROVIDE PROOF OF LICENSE TO PERFORM WORK IN JURISDICTION AT TIME OF BID AWARD.
3. CONTRACTOR WILL PROVIDE A CONSTRUCTION SCHEDULE PRIOR TO CONSTRUCTION STARTING AND WILL PROVIDE UPDATE/CHANGES (WITH EXPLANATIONS) TO THAT SCHEDULE WHEN/IF ITEMS ARE DELAYED OR PUSHED OUT.
4. CONTRACTOR WILL BE RESPONSIBLE FOR ALL CONCRETE COMPRESSIVE TESTING AND REQUIRED TO SUBMIT FINAL TEST RESULTS WITH CLOSE OUT BOOK.
5. CONTRACTOR WILL BE RESPONSIBLE TO PROVIDE SBA PROJECT MANAGERS WITH PHOTOS OF THE MAJOR CONSTRUCTION MILESTONES AS THEY OCCUR.
6. CONTRACTOR WILL BE RESPONSIBLE TO ASSIST IN COORDINATING AND OBTAINING PRIMARY POWER TO THE SITE PRIOR TO TOWER ERECTION, AS WELL AS TELCO SERVICE BEFORE PROJECT COMPLETION. (ON SITE VISITS WITH UTILITY COMPANY REPRESENTATIVES AS NECESSARY, ETC....).
7. CONTRACTOR WILL HAVE A REPRESENTATIVE ON A WEEKLY CONFERENCE CALL TO PROVIDE SBA WITH SITE SPECIFIC UPDATES. CURRENTLY, THIS CONFERENCE CALL IS HELD EACH AND EVERY THURSDAY AT 4 PM (EASTERN TIME).
8. CONTRACTOR SHOULD BE PREPARED FOR RANDOM SBA SAFETY INSPECTIONS AT ALL TIMES.
9. CONTRACTOR IS EXPECTED TO MAINTAIN PROPER WORKING CONDITIONS AND PROCEDURES PER OSHA STANDARDS AT ALL TIMES.
10. CONTRACTOR WILL BE REQUIRED TO OBTAIN THE NECESSARY ELECTRICAL PERMITS AND INSPECTIONS AS REQUIRED BY JURISDICTION.
11. CONTRACTOR IS EXPECTED TO CLOSE-OUT THE JOB SITE AS QUICKLY AS POSSIBLE (OBTAINING A CERTIFICATE OF OCCUPANCY AND GETTING SBA'S REGIONAL SITE MANAGER'S SIGN-OFF/CHECKLIST APPROVAL ON THE SITE).
12. CONTRACTOR WILL PROVIDE A COMPLETED TOWER HEIGHT VERIFICATION FORM AND TAPE DROP WITHIN 24 HOURS OF REACHING OVERALL HEIGHT.
13. CONTRACTOR WILL UTILIZE ALL OF THE SBA PROVIDED DOCUMENTATION INCLUDING BUT NOT LIMITED TO: TOWER CONSTRUCTION ACCEPTANCE CHECKLIST, CONSTRUCTION SCHEDULE, CONSTRUCTION CLOSE-OUT LIST & TOWER HEIGHT VERIFICATION.
14. CONTRACTOR IS RESPONSIBLE FOR CONCRETE COMPRESSION TESTING.
15. CONTRACTOR IS RESPONSIBLE FOR GROUND MEG TESTING.

SBA
SBA TOWERS VI, LLC
5900 BROKEN SOUND PLACE
BOCA RATON, FL 33487
PHONE: 1-800-487-7483

TERRA CONSULTING GROUP, LTD.
600 Busse Highway
Park Ridge, IL 60068
Ph: 847/698-6400
Fax: 847/698-6401

REVISIONS

NO.	DESCRIPTION	DATE
-	ISSUED FOR REVIEW/PERMIT	01/26/15

SITE 301513

SBA # MI16549-B

WELLS 3

N 28TH ST
ESCANABA, MI 49829

DRAWN BY	BTE
CHECKED BY:	TAZ
DATE:	01/26/15
PROJECT #	7595

SHEET TITLE
GENERAL NOTES

SHEET NUMBER
N-1

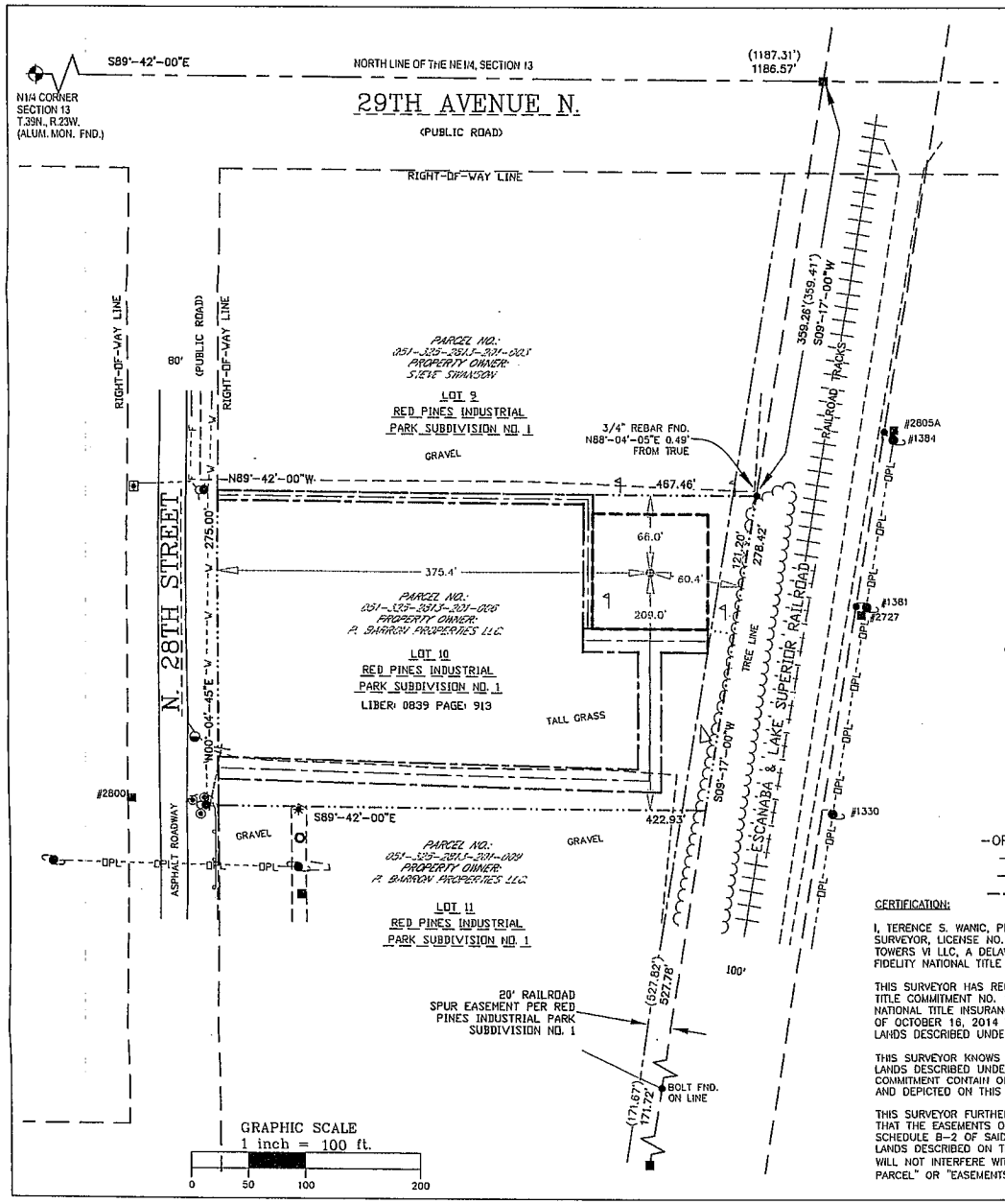

MISS DIG System, Inc.

Please allow for 3 full working days before you dig - call the MISS DIG System at 811 or 800-482-7171.

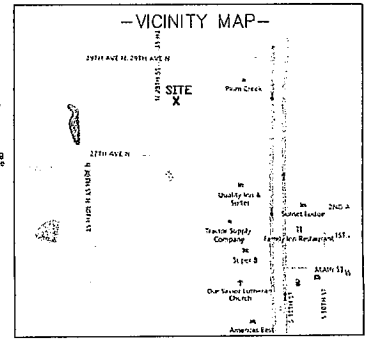

DAVIS WANIC
LAND SURVEYORS, P.C.
1410 Ludington Street
Escanaba, Michigan 49829
Phone (906)786-1755,
Fax 786-6487
info@daviswanic.com

-LEGEND-

- = 1" X 18" IRON PIPE SET
- = 3/4" REBAR FOUND
- = 6" NAIL SET
- = COUNTY MONUMENT FOUND
- = CONC. MON. W/ IRON ROD
- ( ) = RECORDED INFORMATION
- = EXISTING POWER POLE
- = ELECTRIC METER
- = TELEPHONE PEDESTAL
- = FIBER OPTIC VAULT
- = LIGHT POLE
- = METAL POST
- = WOOD POST
- = MANHOLE
- = WATER VALVE
- = FIRE HYDRANT
- = LATHE/MARKER
- -OPL- = OVERHEAD ELECTRIC
- -F- = BURIED FIBER OPTIC
- -W- = WATER MAIN
- —·—· = PROPERTY LINE

BEARINGS REFERENCED TO THE RECORDED PLAT OF "ESCANABA INDUSTRIAL PARK SUBDIVISION NO. 1" LIBER C OF PLAT, PAGES 60-61
ALL DISTANCES ARE GROUND DISTANCES

CERTIFICATION:

I, TERENCE S. WANIC, PLS, A MICHIGAN PROFESSIONAL LAND SURVEYOR, LICENSE NO. 44296, HEREBY CERTIFY TO SBA TOWERS VI LLC, A DELAWARE LIMITED LIABILITY COMPANY AND FIDELITY NATIONAL TITLE INSURANCE COMPANY THE FOLLOWING:

THIS SURVEYOR HAS RECEIVED AND REVIEWED THAT CERTAIN TITLE COMMITMENT NO. 19598795 ISSUED BY FIDELITY NATIONAL TITLE INSURANCE COMPANY WITH AN EFFECTIVE DATE OF OCTOBER 16, 2014 WHICH PROPOSES TO INSURE THE LANDS DESCRIBED UNDER ITS SCHEDULE A.

THIS SURVEYOR KNOWS OF HIS OWN KNOWLEDGE THAT THE LANDS DESCRIBED UNDER SAID SCHEDULE A OF THE TITLE COMMITMENT CONTAIN OR INCLUDE THE LANDS DESCRIBED IN AND DEPICTED ON THIS SURVEY.

THIS SURVEYOR FURTHER KNOWS OF HIS OWN KNOWLEDGE THAT THE EASEMENTS OF RECORD AND IDENTIFIED UNDER SCHEDULE B-2 OF SAID TITLE COMMITMENT ENCUMBER THE LANDS DESCRIBED ON THIS SURVEY, BUT SAID EASEMENTS WILL NOT INTERFERE WITH THE LOCATION OF THE "LEASE PARCEL" OR "EASEMENTS".

I, TERENCE S. WANIC, A PROFESSIONAL SURVEYOR IN THE STATE OF MICHIGAN, HEREBY CERTIFY; THAT I HAVE MADE A SURVEY OF THE ABOVE DESCRIBED LANDS, THAT IRON MONUMENTS, TOGETHER WITH THOSE FOUND HAVE BEEN PLACED OR LOCATED AT THE POSITIONS INDICATED HEREON, THAT THERE ARE NO VISIBLE PHYSICAL ENCROACHMENTS EITHER WAY ACROSS PROPERTY LINES, EXCEPT AS SHOWN, THAT THE RELATIVE ERROR OR CLOSURE OF THE UNADJUSTED FIELD MEASUREMENTS OF THE SURVEY IS LESS THAN THE RATIO OF 1 PART IN 10,000.

TERENCE S. WANIC, Professional Surveyor No. 44296

SURVEYED FOR:

TERRA
600 Busse Highway
Park Ridge, IL 60068
OFFICE: (847) 698-6400
FAX: (678) 444-4472

SURVEYED FOR:

SBA
5900 BROKEN SOUND
PARKWAY, N.W.
BOCA RATON, FL 33487

MERIDIAN
SURVEYING, LLC
N8774 Firelane 1
Menasha, WI 54952
Office: 920-993-0881
Fax: 920-273-6037

SITE NAME:	WELLS 3
SITE NUMBER:	MI16549-B
SITE ADDRESS:	2808 N. 28TH ST. ESCANABA, MI 49829

PROPERTY OWNER:
P. BARRON PROPERTIES LLC.
5212 KURTH DR.
ESCANABA, MI 49829

PARCEL NO.: 051-325-2813-201-006

ZONED: INDUSTRIAL

DEED: LIBER: 0839 PAGE: 913

SITE SURVEY
FOR
SBA TOWERS VI, LLC.
LOT 10, RED PINE INDUSTRIAL PARK SUBDIVISION NO. 1 BEING A PART OF THE N1/2, SECTION 13, T.39N., R.23W., CITY OF ESCANABA, DELTA COUNTY, MICHIGAN

NO.	DATE	DESCRIPTION	BY
2	1/8/15	Added Tower, Lease, & Ease.	J.B.
1	10/31/14	Preliminary Survey	J.B.

DRAWN BY: J.B.	FIELD WORK DATE: 10-27-14
CHECKED BY: T.S.W.	FIELD BOOK: M-33, PG. 1
JOB NO.: 7941-B1809	SHEET 1 OF 3

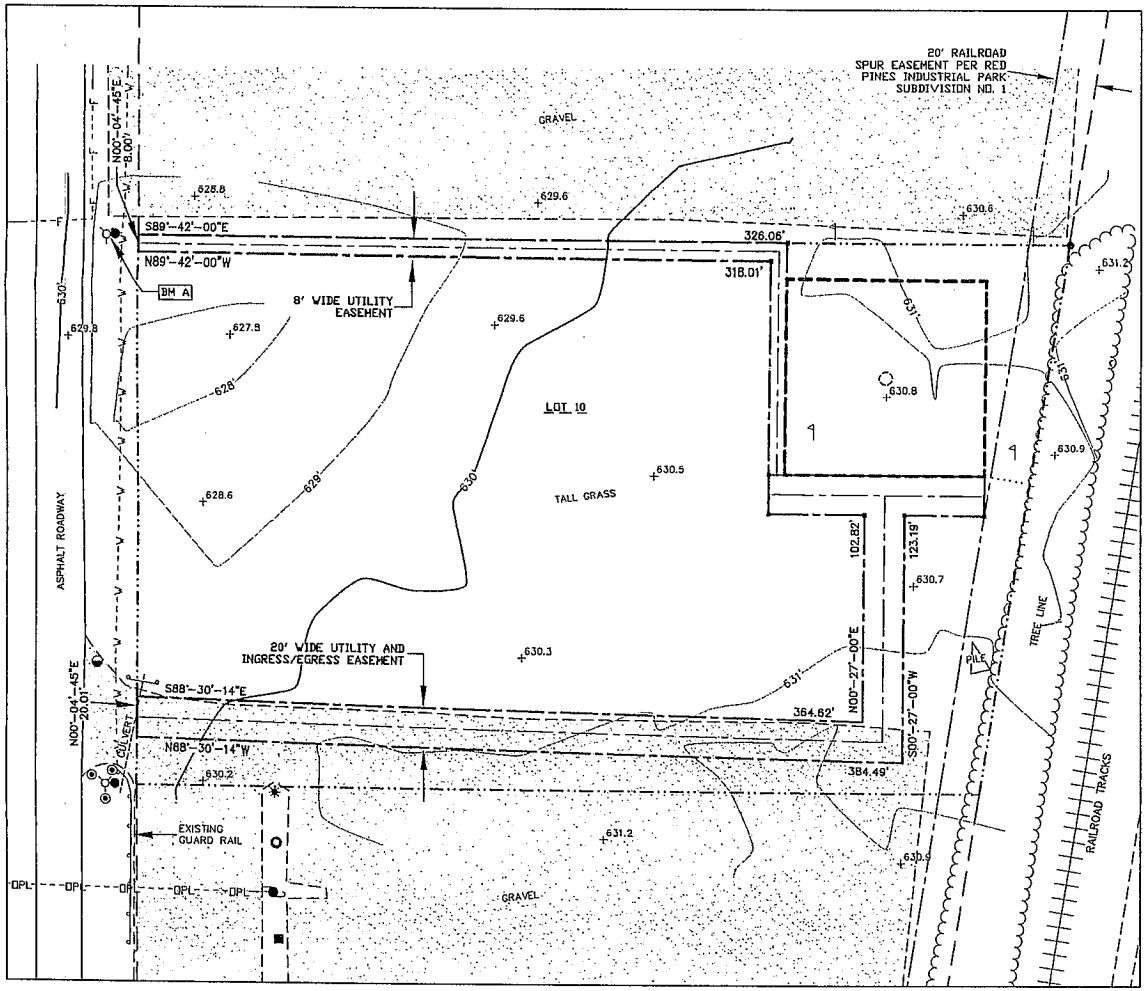

PROPOSED TOWER BASE

LATITUDE: 45°-46'-53.59"
LONGITUDE: 87°-05'-09.53"
(Per North American Datum of 83/2011)

Ground Elevation: 630.8'
(Per North American Vertical Datum of 1988)

—LEGEND—

- = 1" X 18" IRON PIPE SET
- = 3/4" REBAR FOUND
- = 6" NAIL SET
- = COUNTY MONUMENT FOUND
- = CONC. MON. W/ IRON ROD
- ( ) = RECORDED INFORMATION
- = EXISTING POWER POLE
- = ELECTRIC METER
- = TELEPHONE PEDESTAL
- = FIBER OPTIC VAULT
- = LIGHT POLE
- = METAL POST
- = WOOD POST
- = MANHOLE
- = WATER VALVE
- = FIRE HYDRANT
- = LATHE/MARKER
- —OPL— = OVERHEAD ELECTRIC
- —F— = BURIED FIBER OPTIC
- —W— = WATER MAIN
- —·—·— = PROPERTY LINE

GRID NORTH (NAD 83/2011)
-00°-03'-42"
GEODETIC NORTH

BEARINGS REFERENCED TO THE RECORDED PLAT OF "ESCANABA INDUSTRIAL PARK SUBDIVISION NO. 1" LIBER C OF PLAT, PAGES 60-61
ALL DISTANCES ARE GROUND DISTANCES

SURVEY NOTES:

-THE LOCATION OF THE EXISTING UTILITIES, AS SHOWN ON THIS PLAN, ARE APPROXIMATE ONLY. IT SHALL BE THE RESPONSIBILITY OF THE CONTRACTOR TO VERIFY ACTUAL LOCATION AND DEPTH OF ALL EXISTING UTILITIES. THE OWNER AND THE SURVEYOR SHALL NOT BE RESPONSIBLE FOR ANY OMISSION OR VARIATION FROM THE LOCATION SHOWN.

-THIS IS NOT A BOUNDARY SURVEY OF THE PARENT PARCEL. THIS SURVEY REPRESENTS THE LEASE AREA AND EASEMENTS ONLY.

WETLAND NOTE:

-THE PRESENCE AND LOCATION OF WETLANDS HAS NOT BEEN DETERMINED ON THIS PROPERTY. WETLANDS SHOULD ONLY BE DETERMINED BY ACTUAL FIELD DELINEATION PERFORMED BY A QUALIFIED WETLAND SPECIALIST.

BENCHMARK INFORMATION
SITE BENCHMARK: (BM A)
TOP OF TAG BOLT ON FIRE HYDRANT
ELEVATION: 630.13'

GRAPHIC SCALE
1 inch = 60 ft.
0 30 60 120

I, TERENCE S. WANIC, A PROFESSIONAL SURVEYOR IN THE STATE OF MICHIGAN, HEREBY CERTIFY; THAT I HAVE MADE A SURVEY OF THE ABOVE DESCRIBED LANDS, THAT IRON MONUMENTS, TOGETHER WITH THOSE FOUND HAVE BEEN PLACED OR LOCATED AT THE POSITIONS INDICATED HEREON, THAT THERE ARE NO VISIBLE PHYSICAL ENCROACHMENTS EITHER WAY ACROSS PROPERTY LINES, EXCEPT AS SHOWN, THAT THE RELATIVE ERROR OF CLOSURE OF THE UNADJUSTED FIELD MEASUREMENTS OF THE SURVEY IS LESS THAN THE RATIO OF 1 PART IN 10,000.

TERENCE S. WANIC, Professional Surveyor No. 44296

SURVEYED FOR:

TERRA
600 Busse Highway
Park Ridge, IL 60068
OFFICE: (847) 698-6400
FAX: (678) 444-4472

SURVEYED FOR:

SBA
5900 BROKEN SOUND PARKWAY, N.W.
BOCA RATON, FL 33487

MERIDIAN SURVEYING, LLC
N8774 Firelane 1
Menasha, WI 54952
Office: 920-993-0881
Fax: 920-273-6037

SITE NAME:	WELLS 3
SITE NUMBER:	MI16549-B
SITE ADDRESS:	2808 N. 28TH ST. ESCANABA, MI 49829

PROPERTY OWNER:
P. BARRON PROPERTIES LLC.
5212 KURTH DR.
ESCANABA, MI 49829

PARCEL NO.: 051-325-2813-201-006

ZONED: INDUSTRIAL

DEED: LIBER: 0839 PAGE: 913

SITE SURVEY
FOR
SBA TOWERS VI, LLC.
LOT 10, RED PINE INDUSTRIAL PARK SUBDIVISION NO. 1 BEING A PART OF THE N1/2, SECTION 13, T.39N., R.23W., CITY OF ESCANABA, DELTA COUNTY, MICHIGAN

NO.	DATE	DESCRIPTION	BY
2	1/8/15	Added Tower, Lease, & Ease.	J.B.
1	10/31/14	Preliminary Survey	J.B.

DRAWN BY: J.B.	FIELD WORK DATE: 10-27-14
CHECKED BY: T.S.W.	FIELD BOOK: M-33, PG. 1
JOB NO.: 7941-B1809	SHEET 2 OF 3

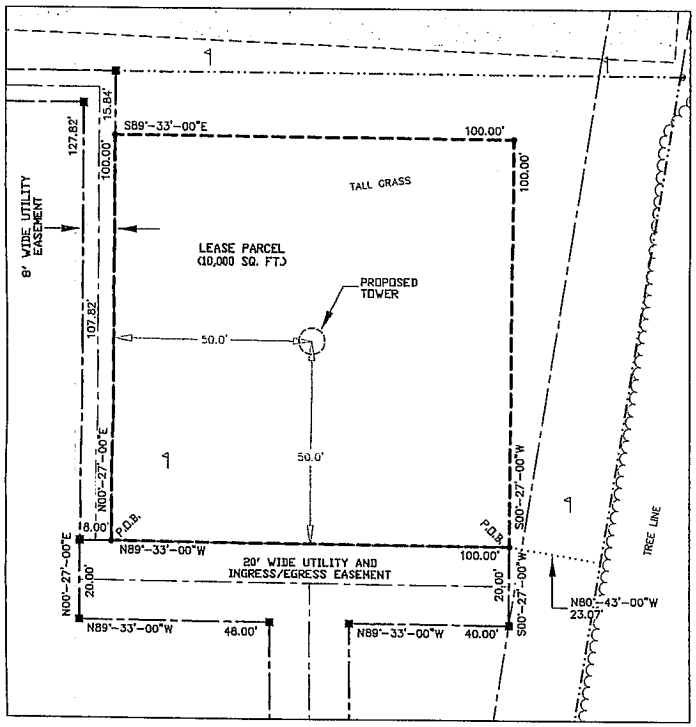

GRAPHIC SCALE
1 inch = 30 ft.
0 15 30 60

BEARINGS REFERENCED TO THE RECORDED PLAT OF "ESCANABA INDUSTRIAL PARK SUBDIVISION NO. 1" LIBER C OF PLAT, PAGES 60-61
ALL DISTANCES ARE GROUND DISTANCES

N

I, TERENCE S. WANIC, A PROFESSIONAL SURVEYOR IN THE STATE OF MICHIGAN, HEREBY CERTIFY; THAT I HAVE MADE A SURVEY OF THE ABOVE DESCRIBED LANDS, THAT IRON MONUMENTS, TOGETHER WITH THOSE FOUND HAVE BEEN PLACED OR LOCATED AT THE POSITIONS INDICATED HEREON, THAT THERE ARE NO VISIBLE PHYSICAL ENCROACHMENTS EITHER WAY ACROSS PROPERTY LINES, EXCEPT AS SHOWN, THAT THE RELATIVE ERROR OR CLOSURE OF THE UNADJUSTED FIELD MEASUREMENTS OF THE SURVEY IS LESS THAN THE RATIO OF 1 PART IN 10,000.

TERENCE S. WANIC, Professional Surveyor No. 44296

—LEGEND—

- = 1" X 18" IRON PIPE SET
- = 3/4" REBAR FOUND
- = 6" NAIL SET
- = COUNTY MONUMENT FOUND
- = CONC. MON. W/ IRON ROD
- ( ) = RECORDED INFORMATION
- = EXISTING POWER POLE
- = ELECTRIC METER
- = TELEPHONE PEDESTAL
- = FIBER OPTIC VAULT
- = LIGHT POLE
- = METAL POST
- = WOOD POST
- = MANHOLE
- = WATER VALVE
- = FIRE HYDRANT
- = LATHE/MARKER
- —OPL— = OVERHEAD ELECTRIC
- —F— = BURIED FIBER OPTIC
- —W— = WATER MAIN
- —·····— = PROPERTY LINE

LEASE PARCEL

A part of Lot Ten (10) of Red Pine Industrial Park Subdivision No. 1 and being a part of the North Half (N1/2) of Section Thirteen (13), Township thirty-Nine (39) North, Range Twenty-Three (23) West, City of Escanaba, Delta County, Michigan containing 10,000 square feet (0.229 acres) of land and being described by:

Commencing at the North Quarter Corner of said Section 13; thence S89°-42'-00"E 1186.57 feet (recorded as 1187.31 feet) along the north line of the NE1/4 of said Section 13 to the west line of the Escanaba & Lake Superior Railroad; thence S09°-17-00"W 359.26 (recorded as 359.41 feet) along said west line to the Northeast Corner of said Lot 10 of Red Pine Industrial Park Subdivision No. 1; thence continue S09°-17-00"W 121.20 feet along the east line of said Lot 10; thence N80°-43'-00"W 23.07 feet to the point of beginning; thence N89°-33'-00"W 100.00 feet; thence N00°-27-00"E 100.00 feet; thence S89°-33'-00"E 100.00 feet; thence S00°-27-00"W 100.00 feet to the point of beginning being subject to any and all easements and restrictions of record.

20' WIDE UTILITY AND INGRESS/EGRESS EASEMENT

A part of Lot Ten (10) of Red Pine Industrial Park Subdivision No. 1 and being a part of the North Half (N1/2) of Section Thirteen (13), Township thirty-Nine (39) North, Range Twenty-Three (23) West, City of Escanaba, Delta County, Michigan containing 11,911 square feet (0.273 acres) of land and being described by:

Commencing at the North Quarter Corner of said Section 13; thence S89°-42'-00"E 1186.57 feet (recorded as 1187.31 feet) along the north line of the NE1/4 of said Section 13 to the west line of the Escanaba & Lake Superior Railroad; thence S09°-17-00"W 359.26 (recorded as 359.41 feet) along said west line to the Northeast Corner of said Lot 10 of Red Pine Industrial Park Subdivision No. 1; thence continue S09°-17-00"W 121.20 feet along the east line of said Lot 10; thence N80°-43'-00"W 23.07 feet to the point of beginning; thence S00°-27-00"W 20.00 feet; thence N89°-33'-00"W 40.00 feet; thence S00°-27-00"W 123.19 feet; thence N88°-30'-14"W 384.49 feet to a point on the east line of N. 28th Street; thence N00°-04'-45"E 20.04 feet along said east line; thence S88°-30'-14"E 364.62 feet; thence N00°-27-00"E 102.82 feet; thence N89°-33'-00"W 48.00 feet; thence N00°-27-00"E 20.00 feet; thence S89°-33'-00"E 108.00 feet to the point of beginning being subject to any and all easements and restrictions of record.

8' WIDE UTILITY EASEMENT

A part of Lot Ten (10) of Red Pine Industrial Park Subdivision No. 1 and being a part of the North Half (N1/2) of Section Thirteen (13), Township thirty-Nine (39) North, Range Twenty-Three (23) West, City of Escanaba, Delta County, Michigan containing 3,471 square feet (0.080 acres) of land and being described by:

Commencing at the North Quarter Corner of said Section 13; thence S89°-42'-00"E 1186.57 feet (recorded as 1187.31 feet) along the north line of the NE1/4 of said Section 13 to the west line of the Escanaba & Lake Superior Railroad; thence S09°-17-00"W 359.26 (recorded as 359.41 feet) along said west line to the Northeast Corner of said Lot 10 of Red Pine Industrial Park Subdivision No. 1; thence continue S09°-17-00"W 121.20 feet along the east line of said Lot 10; thence N80°-43'-00"W 23.07 feet; thence N89°-33'-00"W 100.00 feet to the point of beginning; thence continue N89°-33'-00"W 8.00 feet; thence N00°-27-00"E 107.82 feet; thence N89°-42'-00"W 318.01 feet to a point on the east line of N. 28th Street; thence N00°-04'-45"E 8.00 feet along said east line to the northwest corner of said Lot 10; thence S89°-42'-00"E 326.06 feet along the north line of said Lot 10; thence S00°-27-00"W 115.84 feet to the point of beginning being subject to any and all easements and restrictions of record.

PARENT PARCEL

Lot 10 of Red Pines Industrial Park Subdivision No. 1, according to the plat thereof, as recorded in Liber C of Plats, Page 139, Delta County Records.

AND BEING the same property conveyed to Patrick Barron from City of Escanaba, a municipal corporation by Warranty Deed dated March 02, 2006 and recorded March 15, 2006 in Deed Book 839, Page 913; AND FURTHER CONVEYED to P. Barron Properties, LLC, a Michigan limited liability company from A.M. Express, Inc., a Michigan corporation by Quit-Claim Deed dated May 20, 2010 and recorded June 11, 2010 in Deed Book 986, Page 247; AND FURTHER CONVEYED to P. Barron Properties, LLC, a Michigan limited liability company from Patrick Barron by Quit-Claim Deed dated October 06, 2014 and recorded October 13, 2014 in Deed Book 1116, Page 88.
Tax Parcel No. 21-051-325-2813-201-006

TITLE REPORT REVIEW

Title Report: Fidelity National Title Insurance Company

Commitment No. 19598795

Effective Date: October 16, 2014

Fee Simple Title Vested In: P. Barron Properties, LLC, a Michigan limited liability company

NOTE: The Statement of Applicability refers to the Lease Site and any Easements pertinent Thereunto Where Specific Encumbrances affect the Lease Site and/or a Pertinent Easement, they are identified as such.

Schedule B-II

(1-7) These are General Statements and not Specific Encumbrances.

(8) Plat of Red Pines Industrial Park Subdivision No. 1 recorded on 02/14/1980 in Plat Book C, Page 139. All easements are plotted and shown.

(9) Easement in favor of The City of Escanaba, a Michigan corporation, set forth in instrument recorded on 12/09/1998 in Deed Book 521, Page 786. This is a 20 foot wide blanket easement for electric lines upon the parent parcel. Does apply but cannot be specifically mapped.

(10) Mortgage from P. Barron Properties, LLC, a Michigan limited liability company, Daniel R. Barron and Irene M. Barron and Patrick A. Barron, Grantor(s), in favor of Wells Fargo Bank, National Association, dated 01/11 2008, and recorded 11/24/2008 in Deed Book 01 905, Page 758, in the original amount of $317,769.42; Modification of Mortgage, dated 04/12/2010 and recorded 04/29/2010 in Deed Book 982, Page 937.
Applies to the parent parcel.

(11) Mortgage from P. Barron Properties LLC, a Michigan limited liability company, Grantor(s), in favor of Northern Michigan Bank & Trust, dated 10/06/2014, and recorded 10/13/2014 in Deed Book 1116, Page 89, in the original amount of $500,000.00; Assignment of Rents, dated 10/06/2014 and recorded 10/13/2014 in Deed Book 1116, Page 100. Applies to the parent parcel.

(12) UCC/Financing Statement between P. Barron Properties LLC, Debtor(s), and Northern Michigan Bank & Trust, Creditor, filed on 10/13/2014, in the official records as Deed Book 1116, Page 107. Applies to the parent parcel.

SURVEYED FOR:
TERRA
600 Busse Highway
Park Ridge, IL 60068
OFFICE: (847) 698-6400
FAX: (678) 444-4472

SURVEYED FOR:
SBA
5900 BROKEN SOUND PARKWAY, N.W.
BOCA RATON, FL 33487

MERIDIAN SURVEYING, LLC
N8774 Firelane 1
Menasha, WI 54952
Office: 920-993-0881
Fax: 920-273-6037

SITE NAME:	WELLS 3
SITE NUMBER:	MI16549-B
SITE ADDRESS:	2808 N. 28TH ST. ESCANABA, MI 49829

PROPERTY OWNER:
P. BARRON PROPERTIES LLC.
5212 KURTH DR.
ESCANABA, MI 49829

PARCEL NO.: 051-325-2813-201-006

ZONED: INDUSTRIAL

DEED: LIBER: 0839 PAGE: 913

SITE SURVEY
FOR
SBA TOWERS VI, LLC.
LOT 10, RED PINE INDUSTRIAL PARK SUBDIVISION NO. 1 BEING A PART OF THE N1/2, SECTION 13, T.39N., R.23W., CITY OF ESCANABA, DELTA COUNTY, MICHIGAN

NO.	DATE	DESCRIPTION	BY
2	1/8/15	Added Tower, Lease, & Ease.	J.B.
1	10/31/14	Preliminary Survey	J.B.

DRAWN BY: J.B.	FIELD WORK DATE: 10-27-14
CHECKED BY: T.S.W.	FIELD BOOK: M-33, PG. 1
JOB NO.: 7941-B1809	SHEET 3 OF 3

TABLE OF CONTENTS
WIRELESS TELECOMMUNICATON FACILITIES

Section

1901 Wireless Communication Facility Development Standards 1
1902 Purpose 1
1903 Certain Uses Not Covered By This Ordinance 2
1904 Interpretation and Definitions 2
1905 Location for Wireless Communication Facilities and Applicability.. 3
1906 Development Standards 4
1907 Review Process 6
1908 Approval Process 7
1909 Shared Facilities and Collocation Policy 9
1910 Removal of Abandoned Support Structures 9
1911 Nonconforming/Existing Facilities 9
1912 Revocation of Towers and Antenna Use Applications 9
1913 Penalty 10
1914 Periodic Review 10

WIRELESS TELECOMMUNICATION FACILITIES

SECTION 1901
WIRELESS COMMUNICATION FACILITY DEVELOPMENT STANDARDS

General. The following definitions and development standards for the zoning jurisdiction of the City of Escanaba shall; / to the installation, construction, attachment, removal, and alteration of facilities to accommodate wireless communication s; 2) provide the criteria for evaluating such proposed activities; 3) provide a procedure for the suitability certification and lishing related purposes.

SECTION 1902
PURPOSE

General. In recognition of the requirements of the Federal Telecommunications Act of 1996, this ordinance is designed ended to balance the interests of the residents of Escanaba, telecommunications providers, and telecommunications ers in the siting of telecommunication facilities within the city of Escanaba, so as to ensure coordinated development of nications infrastructure while preserving the health, safety and welfare of the city and its residents. This ordinance hes general guidelines for the siting of wireless telecommunication towers; and antennas to enhance and fulfil the following:

erve the authority of the City of Escanaba Planning Commission to provide for reasonable opportunity for the siting of mmunications services and to provide such services to the community effectively and efficiently;
imize the visual impact of such facilities as viewed from other vantage points;
ide a range of locations for Wireless Communication Facilities throughout the City of Escanaba;
courage the location of Wireless Communication Facilities onto existing structures to reduce the number of new nication towers needed within the City of Escanaba;
urage collocation and site sharing of new and existing Wireless Communication Facilities;
rol the type of tower facility constructed when towers are permitted;
blish adequate development and design criteria to enhance the ability of providers of telecommunications services to provide to the community quickly, effectively, and efficiently;
nce prosperity through protection of property values; and reduce adverse impacts such facilities may create, including, but ted to, impacts on aesthetics environmentally sensitive areas, historically significant locations, flight corridors and scenic s from the uncontrolled development of Wireless Communications Facilities by requiring reasonable siting conditions;
ote the use of suitable lands for the location of wireless antennae, towers, and/or Wireless Communication Facilities;
e the harmonious, orderly and efficient growth and development of Wireless Communication Facilities within the City of a;
nce the economy of the City of Escanaba through the continued use of the City of Escanaba 's public resources;

l. Provide development standards for the development of Wireless Communication Facilities which are consistent with the requirements of the Federal Telecommunications Act of 1996 and in the best interest of the future of the City of Escanaba;

m. Provide clear performance standards addressing the siting of Wireless Communication Facilities;
n. Streamline and expedite the permitting procedures to effect compliance with the Federal Telecommunications Act of 1996; and
o. Provide for the removal of abandoned facilities that are no longer inspected for safety concerns and Building Code compliance; and provide a mechanism for the city to remove these abandoned towers to protect the citizens from imminent harm and danger.

SECTION 1903
CERTAIN USES NOT COVERED BY THIS ORDINANCE

1903.1. General. Nothing in the ordinance shall affect the right of a property owner to continue any legal non-conforming use.

SECTION 1904
INTERPRETATION AND DEFINITIONS

1904.1. Construction of Other Ordinances. To the extent these development standards conflict with other Ordinances for the City of Escanaba, these development standards shall control.

1904.1.1. Rules for Words and Phrases. For the purposes of Section, words used in the present tense include the future tense; words in the singular number include the plural number, and words in the plural number include the singular number; the word "shall" is mandatory; the word "may" is permissive; the word "used" includes "designed" and "intended" or arranged to be used or occupied; and the word "person" includes a firm, association, organization, partnership, trust, foundation, company or corporation as well as an individual.

1904.2. Definitions. For the purpose of this Section certain words, phrases and terms used herein shall be interpreted. Any word, phrase or term not defined herein, shall be interpreted based upon its common and ordinary usage in the region. The director of Community Development and Planning for the City of Escanaba or designee shall define any word, phrase or term not defined herein. The interpretation shall be based upon its common and ordinary usage in the region.

Antenna Array. An Antenna Array is one or more rods, panels, discs or similar devices used for the transmission or reception of radio frequency signals, which may include omni-directional antenna (rod), directional antenna (panel) and parabolic antenna (disc). The Antenna Array does not include the Support Structure.

rnative Tower Structure. Innovative siting techniques such as artificial trees, clock towers, bell towers, steeples, light poles and similar design mounting structures that camouflage or conceal the presence of antenna array's or towers.

Attached Wireless Communication Facility. An Attached Wireless Communication Facility is an Antenna Array that is attached to an existing building or structure (Attachment Structure), which structures shall include but not be limited to utility poles, signs, water towers, rooftops, towers with any accompanying pole or device (Attachment Device) which attaches the Antenna Array to the existing building or structure and associated connection cables, and an Equipment Facility which may be located either inside or outside of the Attachment Structure.

Collocation/Site Sharing. Collocation/Site Sharing shall mean use of a common Wireless Communication Facility or common site by more than one wireless communication license holder or by one wireless license holder for more than one type of communications technology and/or placement of an antenna array on a structure owned or operated by a utility or other public entity.

Essential Services. Services provided by a public utility or government agencies through erection, construction or maintenance of underground or overhead gas, electrical, steam or water transmission and distribution systems, and collection, communications, supply or disposal systems. Facilities necessary for the provision of essential services including pole wires, mains, drains, sewers, pipes, conduits, cables, fire alarm boxes, police call boxes, traffic signals, hydrants and other similar equipment and accessories in connection therewith.

Equipment Facility. An Equipment Facility is any structure used to contain ancillary equipment for a Wireless Communication Facility, which includes cabinets, shelters, a build out of an existing structure, pedestals, and other similar structures.

Federal Aviation Administration. FAA

Federal Communications Commission. FCC

Federal Telecommunications Act of 1996. FTA.

Guy Wire. A cable used to secure and steady a tower.

Height. When referring to a Wireless Communication Facility, height shall mean the vertical distance measured from ground level to the highest point on the Wireless Communication Facility, including the antenna array and other attachments.

Monopole. Any tower consisting of a single pole, constructed without guy wires or ground anchors.

Pre-existing Towers and Antennas. Any tower or antenna lawfully constructed or permitted prior to the adoption of this ordinance as well as the replacement of any such towers and antennas.

Tower. A structure that is designed and constructed primarily for the purpose of supporting one or more antennas, including self-supporting lattice towers, guy towers or monopole towers. The term includes radio and television transmission towers, microwave towers, common carrier towers, cellular telephone towers, digital communication towers, alternative tower structures and the like.

Setback. Setback shall mean the required distance from the property line of the parcel on which the Wireless Communication Facility is located to the base of the Support Structure and equipment shelter or cabinet where applicable, or, in the case of guy-wire supports, the guy anchors.

Support Structure. A Support Structure is a structure designed and constructed specifically to support an Antenna Array, and may include a monopole, self supporting (lattice) tower, guy-wire-support tower and other similar structures. Any device (Attachment Device) which is used to attach an Attached Wireless Communication Facility to an existing building or structure (Attachment Structure) shall be excluded from the definition of and regulations applicable to Support Structures.

Temporary Wireless Communication Facility. Temporary Wireless Communication Facility shall mean a Wireless Communication Facility to be placed in use for ninety (90) or fewer days.

Tower and Antenna Use Application (TAA). A form provided to the applicant by the City of Escanaba for the applicant to specify the location, construction, use and compliance with the development standards of a proposed Wireless Communications Facility

Wireless Communications. Wireless Communications shall mean any personal wireless services as defined in the Telecommunications Act of 1996, which includes FCC licensed commercial wireless telecommunications services including cellular, personal communication services (PCS), specialized mobile radio (SMR), enhanced specialized mobile radio (ESMR), paging, and similar services.

Wireless Communication Facility. A Wireless Communication Facility is any unstaffed facility for the transmission and/or reception of wireless telecommunications services, usually consisting of an Antenna Array, connection cables, an Equipment Facility, and a Support Structure to achieve the necessary elevation.

SECTION 1905
LOCATION FOR WIRELESS COMMUNICATION FACILITIES AND APPLICABILITY

1905.1. General. The following Wireless Communication Facilities may be allowed within the City of Escanaba as follows;

1905.1.1. Tower and Support Structure. Wireless Communication Facilities with support structures shall only be permitted in Light Manufacturing Districts ("E") and Heavy Manufacturing Districts ("F") by means of a Special Use Permit. A proposal for a new wireless communication facility shall not be approved unless the Zoning Board of Appeals finds that the equipment planned for the proposed tower cannot be accommodated on existing or approved towers, buildings or alternative structures within a one mile search radius of the proposed wireless communications facility due to one or more of the following reasons:

1905.1.1.1. Structural Capacity. The planned equipment would exceed the structural capacity of the existing or approved tower, building or structures, as documented by a qualified and licensed State of Michigan professional engineer, and the existing or approved tower, building or structure cannot be reinforced, modified or replaced to accommodate planned or equivalent equipment at reasonable cost.

1905.1.1.2. Equipment Interference. The planned equipment would cause interference materially impacting the usability of other existing or planned equipment at the tower, building or other

structure as documented by an intermodulation study prepared by qualified personnel and the interference cannot be prevented at a reasonable cost.

1905.1.1.3. Necessary Height. Existing or approved towers, buildings or other structures within the search radius, or combinations thereof, cannot accommodate the planned equipment at a height necessary to function reasonably as documented by qualified personnel and supported with radio frequency propagation studies.

1905.1.1.4. Costs. The fees, costs or contractual provisions required by the owner in order to share an existing tower or other structure to adapt an existing tower or other structure for sharing are unreasonable. Costs exceeding new tower development are presumed to be unreasonable.

1905.1.1.5. Limiting Factors. The Applicant demonstrates that there are other limiting factors that render existing towers and structures unsuitable.

1905.1.2. Antenna Attachments. Antenna attachments onto existing Support Structure or onto an Attached Wireless Communication Facility shall be permitted by administrative approval subject to the development criteria of Section 1906 of this Ordinance.

1905.2. General. The following shall apply in the City of Escanaba.

1905.2.1. Tower and Antenna Special Use Permit Required. No person, firm or corporation shall install or construct any Wireless Communication Facility unless and until a Special Use Permit has been issued pursuant to the requirements of this ordinance.

1905.2.2. Pre-Existing Wireless Communication Facility. Wireless Communications Facilities which were installed prior to the effective date of this Ordinance shall be considered as nonconforming.

1905.2.3. Amateur Radio Exclusion. This Section shall not govern the installation of any amateur radio facility that is owned and operated by a federally licensed amateur radio station operator.

1905.2.4. Relationship to Other Ordinances. Except for Historic Districts, this Section shall supersede all conflicting requirements of other ordinances regarding the locating and permitting of Wireless Communication Facilities.

1905.2.5. Airport Zoning. Any Wireless Communication Facility located or proposed to be located in airport areas governed by the Federal Aviation Administration shall also comply with the provisions of all applicable local, state and federal airport regulations.

1905.2.6. Building Codes. Construction of all Wireless Communication Facilities shall comply with the requirements of the State of Michigan Building, Electrical and Mechanical Codes and permitting process in addition to the requirements of this Section.

1905.2.7. Essential Services and Public Utilities. Wireless Telecommunications Facilities shall not be considered infrastructure, essential services, or public utilities, as defined or used elsewhere in the City's ordinances and regulations. Siting for telecommunications facilities is a use of land and subject to the City's Zoning Ordinance and all other applicable ordinances and regulations.

SECTION 1906
DEVELOPMENT STANDARDS

1906.1. General. Development standards for Wireless Communication Facilities will include the following development standards:

1906.1.1. Height Standards. The following height standards shall apply to all Wireless Communications Facility installations:

1906.1.1.1. Attached Wireless Communications Facilities. Attached Wireless Communication Facilities shall not add more than twenty (20) feet to the height of the existing building or structure to which it is attached (Attachment Structure). However, antenna attachments to existing wireless communication facilities with support structures shall not increase the height of the support structure above the maximum original permitted height of that support structure.

1906.2. Height Review. Height for Wireless Communication Facilities with Support Structures shall be reviewed on a case by case basis as part of the Special Use Permit process.

1906.3. Setback Standards. The following setback standards shall apply to all Wireless Communication Facility installations.

1906.3.1. Attached Wireless Communications Facilities. Attached Wireless Communications Facilities shall meet the setback provisions of the underlying zoning district in which they are located. However, an Attached Wireless Communication Facility Antenna Array may extend up to 30 inches horizontally beyond the edge of the Attachment Structure so long as the Antenna Array does not encroach upon an adjoining parcel.

1906.3.2. Wireless Communications Facilities With Support Structures. Wireless Communications Facilities with Support Structure shall meet the setback requirements for principal structures of the underlying zoning district in which they are located.

1906.3.3. Landscaping. The following landscaping requirements shall be maintained by the applicant and shall apply to all Wireless Communications Facility installations.

1906.3.4. New Construction. New Wireless Communications Facilities with Support Structures and Attached Wireless Communication Facilities with new building construction shall be landscaped with a minimum landscaped area of ten (10) feet around the perimeter of the security fence meeting the following standards:

One row of evergreen trees with a minimum trunk diameter of 1.75 inches shall be installed with a maximum spacing of 25 feet.

1906.4. Shrub Specifications and Standards. Evergreen shrubs capable of creating a continuous hedge and obtaining a height of at least five (5) feet shall be planted with a maximum spacing of five (5) feet. Plants shall be at least three (3) gallon container plants or 24 inches tall at the time of planting.

1906.4.1. Indigenous Plants and Trees. All plants and trees shall be indigenous to the City of Escanaba and Delta County and drought resistant.

1906.4.2. Land Form Preservation. Existing mature tree growth and natural Land Form on the site shall be preserved to the extent feasible; provided however, that vegetation that causes interference with the antennas or inhibits access to the Equipment Facility may be trimmed or removed.

1906.4.3. Existing Vegetation. Existing vegetation on a Wireless Communication Facility site may be used in lieu of required landscaping where approved by the Code Official or designee.

1906.4.4. Minimum Site Disturbance. Grading for the new Wireless Communication Facility shall be minimized and limited only to the area necessary for the new facility.

1906.5. Aesthetics, Placement, Materials and Colors. The following standards shall apply to all new antenna arrays and new wireless communications facilities:

1906.5.1. Antenna Array Attachment Compatibility. Antenna Array Attachments shall be designed so as to be compatible with the wireless communication facility to which it is to be affixed; including but not limited to matching the proposed array with existing structural design, facade colors, and camouflage technology.

1906.5.2. Surroundings Compatibility. New Wireless Communication Facilities shall be designed to be compatible with existing structures and surroundings to the extent feasible. The use of compatible or neutral colors, and camouflage technology may be consistent with existing structures and surroundings to the extent feasible.

1906.5.3. Lighting. The following lighting requirements shall apply to all Wireless Communications Facility installations. Wireless Communications Facilities shall not be artificially illuminated, directly or indirectly, except for:

1906.5.3.1. Security and Safety Lighting. Security and safety lighting of equipment buildings if such lighting is appropriately down shielded to keep light within the boundaries of the site; and

1906.5.3.2. Other Requirements. Such illumination of the Wireless Communications Facility as may be required by the FAA or other applicable authority installed in a manner to minimize impacts on adjacent residences.

1906.5.3.3. Other Required Lighting. Unless otherwise required by the FAA or other applicable authority, the required light shall be red and a type of lens used to reduce ground lighting when the site is within 100' of a residential dwelling.

1906.5.4. Signage. Wireless Communications Facilities shall not display any signage, logos, decals, symbols or any messages of a commercial or noncommercial nature, except for a small message containing provider identification and emergency telephone numbers and such other information as may be required by local, state or federal regulations governing Wireless Communications Facilities.

1906.5.5. Fencing. Wireless Communications Facilities with Support Structures shall be enclosed by a privacy fence constructed of wood, vinyl or metal not less than 6 feet in height. Security features may be incorporated into the buffer and landscaping requirements for the site. Nothing herein shall prevent fencing that is necessary to meet requirements of State or Federal agencies.

1906.5.6. Radio Frequency Emissions/Sound. The following radio frequency emissions standards shall apply to all Wireless Communications Facility installations:

1906.5.6.1. Radio Frequency Impact. The FTA gives the FCC jurisdiction of the regulation of Radio Frequency (RF) emissions, and Wireless Communications Facilities that do not exceed the FCC standards shall not be conditioned or denied on the basis of RF impact.

1906.5.6.2. FCC Compliance. In order to provide information to its citizens, copies of ongoing FCC information concerning Wireless Communications Facilities and RF emissions standards may be requested from time to time. Applicants for Wireless Communications Facilities shall be required to provide information with the application on the measurement of the effective radiated power of the facility and how this meets the FCC standards.

1906.5.6.3. Sound Prohibited. No unusual sound emissions such as alarms, bells, buzzers or the like are permitted.

1906.6. Structural Integrity. Wireless Communications Facilities with Support Structures shall be constructed to the Electronics Industries Association/Telecommunications Industries Association (EIA/TIA) 222 Revision F Standard entitled "Structural Standards for Steel Antennas Towers and Antenna Support Structures" (or equivalent), as it may be updated and amended. Each Support Structure shall be capable of supporting multiple antenna arrays.

1906.7. Collocation Support Structure Design. All Wireless Communication Facilities with a support structure up to a height of 150 feet shall be engineered and constructed to accommodate at least three separate antenna arrays. All Wireless Communication Facilities with a support structure greater than 150 feet shall be engineered and constructed to accommodate at least 4 separate antenna arrays.

1906.8. Collocation Agreement. All applicants for Wireless Communications Facilities are required to submit a statement with the application agreeing to allow and reasonably market collocation opportunities to other Wireless Communications Facility users. The statement shall include the applicant's policy regarding collocation of other providers and the methodology to be used by the applicant in determining reasonable rates to be charged other providers. The Collocation Agreement shall be considered a condition of issuance of a Special Land Use Permit . A TAA shall not be issued unless the applicant complies with the collocation policy outlined in Section 1906.8 of this Ordinance.

1906.9. Federal Requirements. All towers must meet or exceed current standards and regulations of the Federal Aviation Administration, the Federal Communications Commission and any other agency of the Federal Government with the authority to regulate towers and antennas. Failure to bring towers and antennas into compliance with revised standards and regulation within six (6) months of their effective date shall constitute grounds for the removal of the tower or antenna in accordance with the requirements of Section 1910. Removal of Abandoned Support Structures. Of the Wireless Telecommunications Facilities Ordinance.

SECTION 1907
REVIEW PROCESS

1907.1. General. The applicable development criteria referred to herein are those set forth in Subsection 1906 of this Ordinance.

1907.1.1. Permitting Procedures. Attached Wireless Communications Facilities and/or Antenna Array attachments onto existing structures that meet the development criteria may be permitted by Administrative Review. All other proposed Wireless Communication Facilities shall be subject to the Special Land Use Permit process.

1907.2. Site Plan Application/Site Plan Review Approval. A Site Plan Application and Site Plan Review approval are required for any wireless communication facility construction. Co-location of facilities must meet all current Site Plan Review regulations.

1907.2.1. Temporary Wireless Communications Facilities. Temporary Wireless Communications Facilities may be permitted by Administrative Approval for a term not to exceed 90 days. Once granted, a temporary Wireless Communications Facility permit may be extended for an additional 90 days upon evidence of need by the applicant. In case of emergency (e.g., storm damage to an existing tower or other circumstances resulting in the interruption of existing service) the Administrative Review shall be expedited to the extent feasible.

SECTION 1908
APPROVAL PROCESS

1908.1. Application Submission. All Tower Antenna Use Applications, regardless of Wireless Communication Facility type shall include all of the requirements contained in this section.

1908.1.1. Application Contents. Each applicant requesting a TAA under this Ordinance shall submit a sealed complete set of drawings prepared by a licensed architect or engineer that will include a site plan, elevation view and other supporting drawings, calculations and other documentation showing the location and dimensions of the wireless communications facility and all improvements associated therewith, including information concerning specifications, antenna locations, equipment facility and shelters, landscaping, parking, access, fencing and, if relevant as determined by staff, topography, adjacent uses and existing vegetation. Radio frequency propagation maps shall be required for all new tower applications, showing the extent and strength of proposed coverage from the proposed tower, and shall also include the coverage afforded by adjoining existing WCF sites.

1908.1.2. Submission Requirements. Application for a TAA shall be submitted to the City of Escanaba on forms prescribed by the City of Escanaba. The application shall be accompanied by a site plan containing the information described above. Each applicant must provide a copy its FCC license providing authorization for the applicant to operate, receive and transmit wireless communication services for the WCF. If Escanaba Planning Commission Board review is required, the application and site plan shall be placed on the next regularly scheduled meeting agenda in accordance with the agenda deadlines established by the City of Escanaba Planning Commission.

1908.1.3. Application Fees. A plan review fee of $500 shall accompany each application.

1908.1.4. Additional Technical Assistance. In the course of its consideration of an application, the City of Escanaba, may deem it necessary to employ an engineer(s) or other consultant(s) qualified in the design and installation of wireless communication facilities to assist the City of Escanaba in the technical aspects of the application. In such cases, any additional reasonable costs incurred by the City of Escanaba not to exceed two thousand ($2,000) for the technical review and recommendation shall be reimbursed by the applicant prior to the final City of Escanaba hearing on the TAA. The city may also require additional review fees, as necessary, including but not limited to, intermodulation and propagation map studies. These fees shall be reimbursed, at cost, by the applicant.

1908.2. Administrative Review. The following administrative review process shall apply to all wireless communications facility applications eligible for administrative review.

1908.2.1. Review Authority. Review of the Tower and Antenna Special Land Use Application (TAA) under this Section shall be conducted by the City Manager or designee upon filing a TAA.

1908.2.2. Review Criteria. Each application shall be reviewed for compliance with the development criteria specified in Section 1806.1.

1908.2.3. Timing of Decision. The City Manager or designee shall render a decision on the wireless communication facility application by written response to the applicant within twenty (20) business days after receipt of the complete application, except that an extension may be agreed upon by the applicant.

1908.2.4. Application Denial. If Administrative approval is not obtained or is denied due to noncompliance with the development criteria, the applicant may appeal the denial by applying for Zoning Board of Appeals review.

1908.2.5. Application Approval. If the TAA application together with all required addenda are in compliance with the development criteria and otherwise meets the requirements of this Section, the City Manager or designee may approve the Tower Antenna Use Application and authorize issuance of the proper permits.

1908.3. Planning Commission Review. The following shall apply to all Tower and Antenna Use Applications requiring submission to the Planning Commission.

1908.3.1. Review Authority. The Planning Commission shall be the review authority for TAA applications not eligible for Administrative Review or otherwise referred to the Planning Commission.

1908.3.2. Notice. Notice of the application and the public hearing for the Special Land Use Permit by the Planning Commission shall be in accordance with the City of Escanaba Zoning Ordinance.

1908.3.3. Hearing. The Planning Commission shall review and consider the TAA application at a public hearing. At the hearing, interested persons may appear and offer information in support or opposition to the proposed application. The Planning Commission shall consider the following in reaching a decision.

1908.3.4. Development Criteria. The complete Tower Antenna Use Application shall be reviewed for compliance with the development criteria set forth in Section 1906.

1908.3.5. Tower Siting Conditions. The Planning Commission may recommend alternative development criteria, impose conditions or add restrictions on the application as it deems necessary to reduce or minimize any adverse effects and to enhance the compatibility of the wireless communication facility with the surrounding property, in accordance with the purposes and intent of this Ordinance, provided the alternative development criteria, conditions or restrictions are reasonable and capable of being accomplished. The inclusion of additional conditions, development criteria or restrictions shall be by specific inclusion in a motion for approval.

1908.4. Findings of Fact. The Special Land Use Permit shall be granted when each of the following Findings of Fact have been made by the Planning Commission:

1908.4.1. Public Endangerment. The wireless communication facility will not materially endanger the public health or safety if located where proposed and developed according to the plan submitted;

1908.4.2. Required Conditions and Specifications. The wireless communication facility meets all required conditions, specifications and development standards of this Ordinance;

1908.4.3. Property Value/Public Necessity. The wireless communication facility will not substantially injure the value of adjoining or abutting property, or that the use is a public necessity;

1908.4.4. Location and Character of Use. The location and character of the use, if developed according to the plan submitted, will be in harmony with the area in which it is to be located and in general conformity with the plan of development of the Jurisdiction and its environs;

1908.4.5. Development Conditions. If applicable, additional development conditions are based upon the purpose and goals of this Ordinance; and

1908.4.6. Accomplishment. If applicable, additional development conditions are reasonable and capable of being accomplished.

1908.5. Action. Following the public hearing and presentation of evidence, the Planning Commission shall take one of the following actions:

1908.5.1. Application Approval. Approve the application as submitted.

1908.5.2. Approval With Conditions/Restrictions. Approve the application with conditions that impose conditions or add restrictions on the application as it deems necessary to reduce or minimize any adverse effects and to enhance the compatibility of the wireless communication facility with the surrounding property, in accordance with the purposes and intent of this Ordinance, provided the alternative development criteria, conditions or restriction are reasonable and capable of being accomplished. The inclusion of additional conditions, development criteria, or restrictions shall be by specific inclusion on a motion for approval.

1908.5.3. Application Referral. Refer the application for additional information or neighborhood input; or

1908.5.4. Application Denial. Deny the application in writing.

1908.6. Findings. All decisions rendered by the Planning Commission concerning a Tower Antenna Use Application shall be supported by written findings of fact and conclusions of law based upon substantial evidence of record.

1908.7. Timing of Decision. The Planning Commission shall hold a hearing within 60 days or less of the final submission of all required application documents and technical review, however, this time may be increased due to deferrals by either the applicant or the Zoning Board of Appeals.

1908.8. Appeals. The decision of the Planning Commission can be appealed to the Escanaba City Council.

SECTION 1909
SHARED FACILITIES AND COLLOCATION POLICY

1909.1. General. All new Wireless Communication Facilities shall be engineered, designed and constructed to be capable of sharing the facility with other applicants, to collocate with other existing wireless communication facilities and to accommodate the future collocation of other wireless communication facilities. A TAA shall not be issued until the applicant proposing a new wireless communications facility shall demonstrate that it has made a reasonable good faith attempt to locate its Wireless Communication Facility onto an existing structure. Competitive conflict and financial burden alone are not deemed to be adequate reasons against collocation.

SECTION 1910
REMOVAL OF ABANDONED SUPPORT STRUCTURES

1910.1. General. Any support structure that is not operated for a continuous period of twelve (12) months shall be considered abandoned, and the City of Escanaba, at its election, may require the support structure owner to remove the support structure within 90 days after notice from the City of Escanaba to remove the support structure. If there are two or more users of a single support structure, this provision shall not become effective until all providers cease to use the support structure. If the owner of an abandoned support structure cannot be located or is no longer in business, the requirements of this section shall be the responsibility of the landowner on whose property the support is located.

SECTION 1911
NONCONFORMING/EXISTING FACILITIES

1911.1. General. Wireless Communication Facilities in existence on the date of the adoption of this Ordinance which do not comply with the requirements of this Ordinance (nonconforming wireless communications facility) are subject to the following provisions:

1911.1.1. Expansion. Nonconforming wireless communication facilities may continue in use for the purpose now used, but may not be expanded without complying with this Ordinance except as further provided in this Section.

1911.1.2. Additions. Nonconforming wireless communications facilities may add additional antennas (belonging to the same provider or other providers) subject to Administrative Review under this Ordinance.

1911.1.3. Repairs or Reconstruction. Nonconforming wireless communications facilities which become damaged due to any reason or cause, may be repaired and restored to its former use, location, and physical dimensions. Provided, however, that if the damage to the wireless communication facility exceeds 50% of replacement cost, said wireless communication facility may only be reconstructed or repaired in compliance with this ordinance.

1911.1.4. Discontinued Use. Any nonconforming wireless communications facility not in use for six months shall be deemed abandoned and all rights as a nonconforming use shall cease.

SECTION 1912
REVOCATION OF TOWERS AND ANTENNA USE APPLICATIONS

1912.1. General. The approval of any Tower and Antenna Use Application Permit issued pursuant to this Ordinance may be revoked after a hearing as provided hereinafter.

1912.2. Violations. If Zoning Enforcement finds that any permit holder has violated any provision of this Ordinance, or the condition, restriction, or additional development standards of an approved Special Use Permit, or has failed to make good faith reasonable efforts to provide or seek collocation, the Zoning Enforcement Officer of the City of Escanaba shall notify the permit holder in writing that the TAA is revocable due to the permit holder's non-compliance with the conditions of the permit. The Zoning Enforcement officer shall thereupon require the permit holder to correct the violation within a reasonable amount of time, and shall notify the permit holder, in writing, of the specific areas on non-compliance and specify the date by which such deficiencies must be corrected. The time for correction of deficiencies shall not exceed sixty (60) days. The permit holder shall provide the City of Escanaba with evidence that the required corrective action has been taken.

1912.3. Compliance Hearing. Should the permit holder fail to correct any deficiencies in the time required, the Escanaba Planning Commission shall convene a public hearing to consider revocation of the Tower Antenna Use application. The hearing shall be conducted pursuant to notice by publication in a newspaper with general circulation in the City of Escanaba not less than ten days prior to the hearing, the permit holder may be represented by an attorney and may cross-examine opposing witnesses. Other interested persons may comment. The Board may impose reasonable restrictions with respect to time and procedure. The proceedings shall be recorded; provided however, that stenographic services, if desired, shall be provided by the requesting party at that party's expense.

SECTION 1913
PENALTY

1913.1. General. A operator, owner or person who violates any provisions of this ordinance is responsible for a municipal civil infraction subject to payment of a civil fine of not less than fifty dollars ($50.00) or more than five hundred dollars ($500.00) plus costs and other sanctions for each violation. Increased fines may be imposed for repeated violations by an operator, owner or person of any requirement or provision of this ordinance. As used in this section, "repeat offense" means a second (or any subsequent) municipal civil infraction violation of the same requirement or provisions (i) committed by an operator, owner or person within any six month period(unless some other period is specifically provided by ordinance or any other law) and (ii) for which the operator, owner or person admits responsibility or is determined to be responsible. Unless otherwise specifically provided by any ordinance for a particular municipal infraction violation the increased fine for a repeat offense which is a first repeat offense shall be no less than two hundred fifty dollars ($250.00), plus costs. The fine for any offense which is a second repeat offense or any subsequent repeat offense shall be no less than five hundred dollars($500.00), plus costs. Each day on which any violations of this ordinance or any ordinance continues constitutes a separate offense and shall be subject to penalties or sanctions as a separate offense.

SECTION 1914
PERIODIC REVIEW

1914.1. General. The Planning Commission shall routinely review the requirements of this Ordinance every five (5) years to ensure that it is current and accurate.

PH #2

CITY OF ESCANABA
SPECIAL LAND USE REPORT
CASE NO. PC-040915-02

REFERENCE: U.P. State Fair Authority Property – 9th Avenue North

DATE: March 31, 2015

PROPERTY OWNER/APPLICANT ADDRESS:

U.P. State Fair Authority
310 Ludington Street
Escanaba, MI 49829

TYPE OF REQUEST/ DESCRIPTION OF PROPOSED PROJECT:

The U.P. State Fair Authority is requesting an 18 month special land use permit be issued which would allow property that is owned and controlled by the Authority near 9th Avenue North to be leased to the American Transmission Company which will in turn be used as a temporary storage facility for ATC's Bay Lake transmission line construction project. In accordance with Section 1403.1 Uses allowed by special land use permit of Escanaba's Zoning Ordinance, a public hearing for a Special Land Use Permit must be conducted prior to the use permit issuance.

CURRENT ZONING:

Heavy Manufacturing District (G)

ORDINANCE:

Ordinance No.1028 Escanaba Zoning Ordinance

COMPLIANCE WITH DEVELOPMENT STANDARDS/ STAFF COMMENT, GENERAL PLAN GOALS AND CONDITIONS OF APPROVAL:

1. The proposed temporary use will be located on property which is zoned as Heavy Manufacturing District (G). The use is a use that is customary in that particular zone. The use can be a permitted use as a special land use with Planning Commission approval as outlined in Section 1403.1.A

2. The proposed use is being proposed on undeveloped property which does not have any frontage to a constructed public street and will be out of the public view.

3. The use is temporary in nature and all property will be returned to its original state or better upon completion of the lease.

4. All fee and notification requirements of the Ordinance have been accommodated.

DUTIES OF THE PLANNING COMMISSION

The Planning Commission must hold a public hearing so as to facilitate public review and understanding of the proposed development.

Should the Planning Commission reject the site plan, the property owner may appeal the decision to the Zoning Board of Appeals.

If a protest of the proposed special land use permit is presented to the Planning Commission at or before the public hearing date on the request and it is properly signed by the owners of at least twenty percent (20%) of the noticed area of land included in the request, excluding publicly owned land, or by owners of at least twenty percent (20%) of the area of and included within an area extending out at least one hundred (100) feet from any point on the boundary of land included in the request, excluding publicly owned land, then such request for special land use permit approval shall be passed only upon an affirmative vote of three-fourths of the members of the Planning Commission.

PUBLIC CONTACT:

Notice of Public Hearing was published in the Escanaba Daily Press Newspaper and meeting notices were mailed to the adjacent property owners of the project site.

The meeting agenda was posted on the City's official notice bulletin board and the City of Escanaba's website.

ALTERNATIVES:

Not applicable.

ENFORCEMENT HISTORY:

None.

OTHER CONSIDERATIONS:

None.

BACK UP INFORMATION:

1. Application for Zoning Land Use Approval
2. Assessor's Property Information Card
3. 300' radius property owner/tenant notification letter
4. 300' radius labels

NOTES/COMMENTS: _____

P.1

Date Application Received: 3/27/15 Permit #: _____

Pd 200 ch # 15630 3/19/15 (100)

Application for Special Land Use Permit
City of Escanaba, Michigan

Property Owner's Name: * DELTA COUNTY UP STATE FAIR AUTHORITY
Street Address: 310 LUDINGTON STREET
City: ESCANABA State: MI Zip Code: 49829
Telephone: 906-786-2192 (work) _____ (home)
Email Address: VMICHEAU@UP.NET
* If contract purchase, please provide copy of contract

Owner's Representative: STEVE DEBAUCH - LAND SERVICE COMPANY
Street Address: 2717 N. LINCOLN RD
City: ESCANABA State: MI Zip Code: 49829
Telephone: 920 676 8100 Email Address: SDEBAUCH@LANDSERVICECOMPANY.COM

Description of Property
Location (Street Address): 14TH AVE N. Sheet: _____ Block: _____ Lot: _____
Existing Zoning Classification: _____
Existing Comp. Plan Designation: _____
Total land area to be utilized: 5.5 ACRES
(please provide a recent survey of the subject property)
Parcel #: 420-2824-400-001 AND 051-420-2824-400-010
Legal Description: PART OF NE¼ - SE¼ AND NW¼ - SE¼ OF SEC. 24 T39N - R23W LYING SOUTH AND WEST OR RR.

Special Land Use Permit Purpose: The Special Land Use Permit is being requested for the purpose of (describe in detail): LEASE TO AMERICAN TRANSMISSION COMPANY FOR BAY LAKE 4 TRANSMISSION LINE CONSTRUCTION PROJECT. CONSTRUTION MATERIALS AND SHOW UP SITE. CONTRACTOR: MJ ELECTRIC

Names and Addresses of Adjacent Property Owners (Use separate sheet for additional names)
North: (SEE ATTACHED)
South: _____
East: _____
West: _____

Certification:
I certify that the information contained herein is true and accurate:

Signed: _____ Signed: [signature]
Property Owner *Applicant, if different from owner*

For Staff Use:
Checklist
- ☐ Adjacent Property Owners
- ☐ Completed Application
- ☐ Fees Paid
- ☐ Survey of Property
- ☐ Property Located on Tax Map
- ☐ Offers (If Applicable)
- ☐ Notice of PC Hearing Date
- ☐ PC Public Hearing Date
- ☐ Action by PC
- ☐ Notification to City Clerk

OFFICE USE ONLY:
Date Received: _____ Approved: _____ Disapproved: _____

If application is denied, reason for denial: _____

Special requirements of approval: _____

Signature of Administrator: _____ Date: _____

F:guest\wp\jimsforms\zoninginformation\applicationspeciallandusepermit

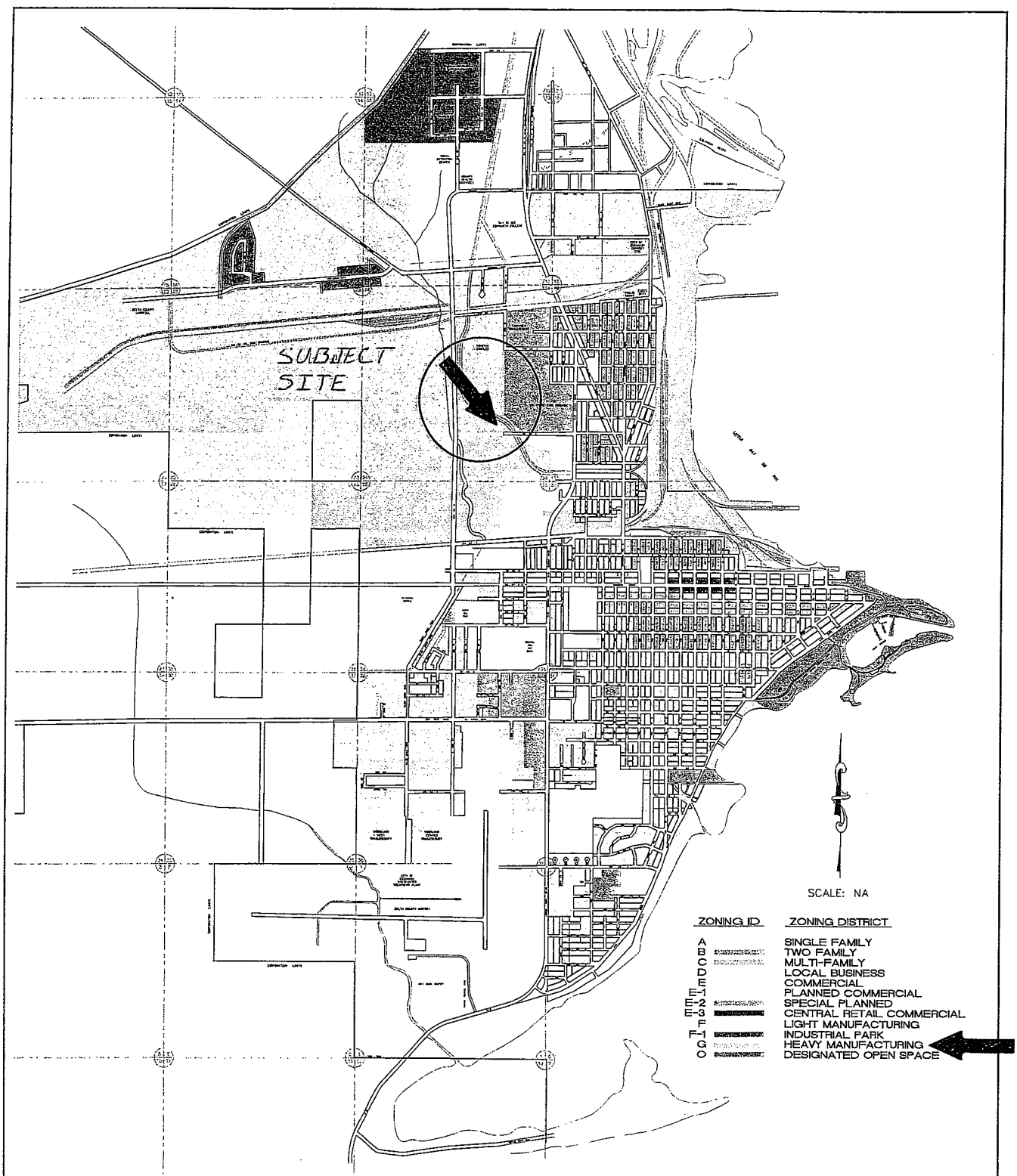

CITY OF ESCANABA
ZONING MAP

L:\Engineering\Dwgs\Zoning_Map.dwg 10-09-14 08:22:19 AM tflower

Adjacent Landowners

North:

051-420-2840-400-009

E& LS Rail Road

P.O. Box 217

Wells, MI 49894

051-420-2848-400-006

Double B Enterprise LLC

P.O. Box 277

Escanaba, MI 49894

051-420-2848-400-008

Skerbeck Family Carnival, Inc.

P.O. Box 364

Escanaba, MI 89829

South:

051-420-2824-400-003

A&L Recycling, LLC

2000 Millbocker Road

Gaylord, MI 49735-7743

051-420-2824-400-002

Lincoln Estates, Inc.

7508 Clubhouse Dr

Gladstone, MI 49837

East:

Delta County

West:

051-420-2848-400-007

051-420-2848-400-021

BOHOTI, LLC

2220 6th Ave North

Escanaba, MI 49829

051-420-2824-400-019

Fastenal Company

1012 North 30th Street

Escanaba, MI 49829

Print

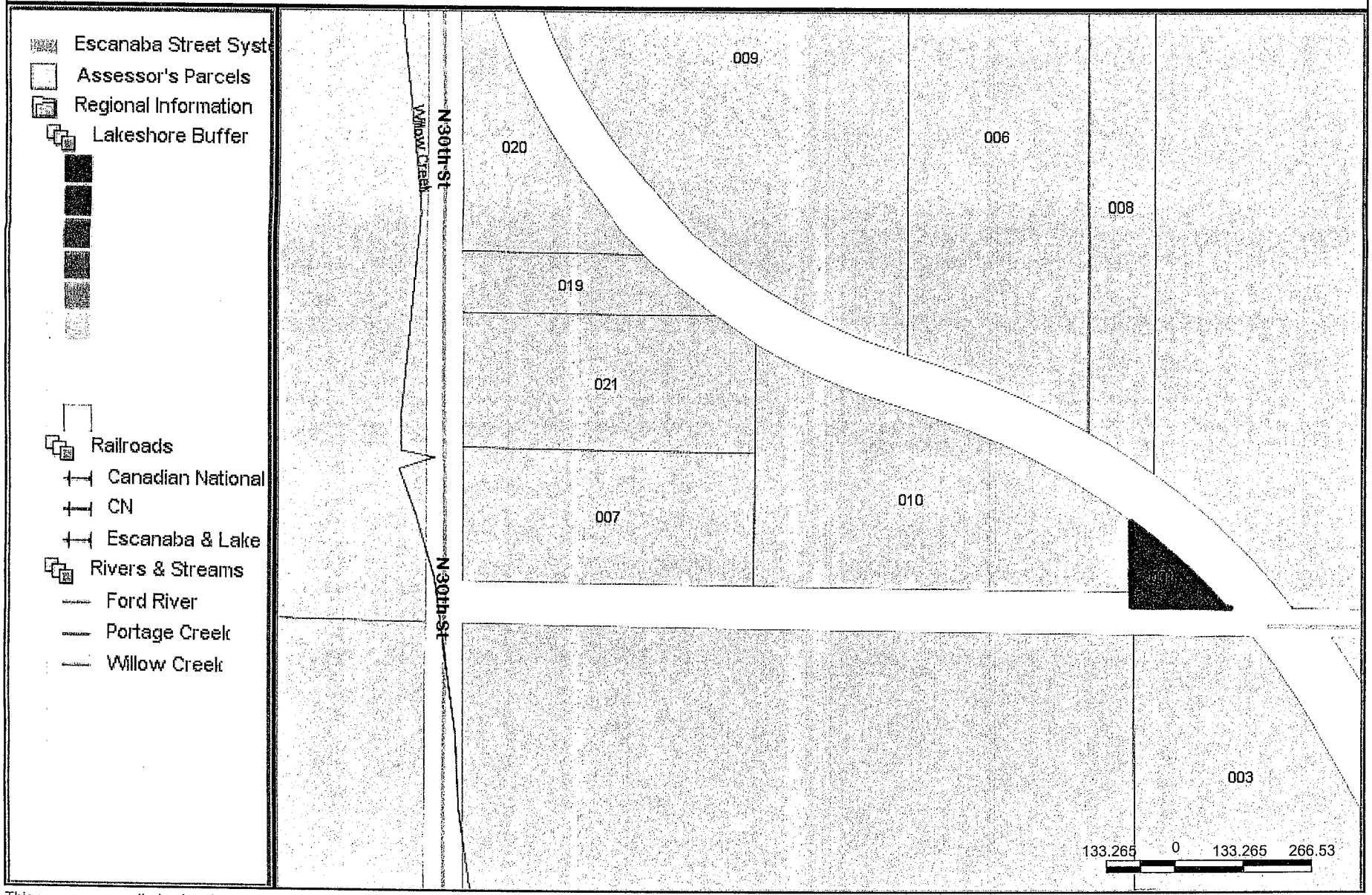

This map was compiled using data believed to be accurate; however, a degree of error is inherent in all maps. This map was distributed "AS-IS" without warranties of any kind, either expressed or implied, including but not limited to warranties of suitability to a particular purpose or use. No attempt has been made in either the design or production of the maps to define the limits or jurisdiction of any federal, state, or local government. Detailed on-the-ground surveys and historical analyses of sites may differ from the maps.

Print

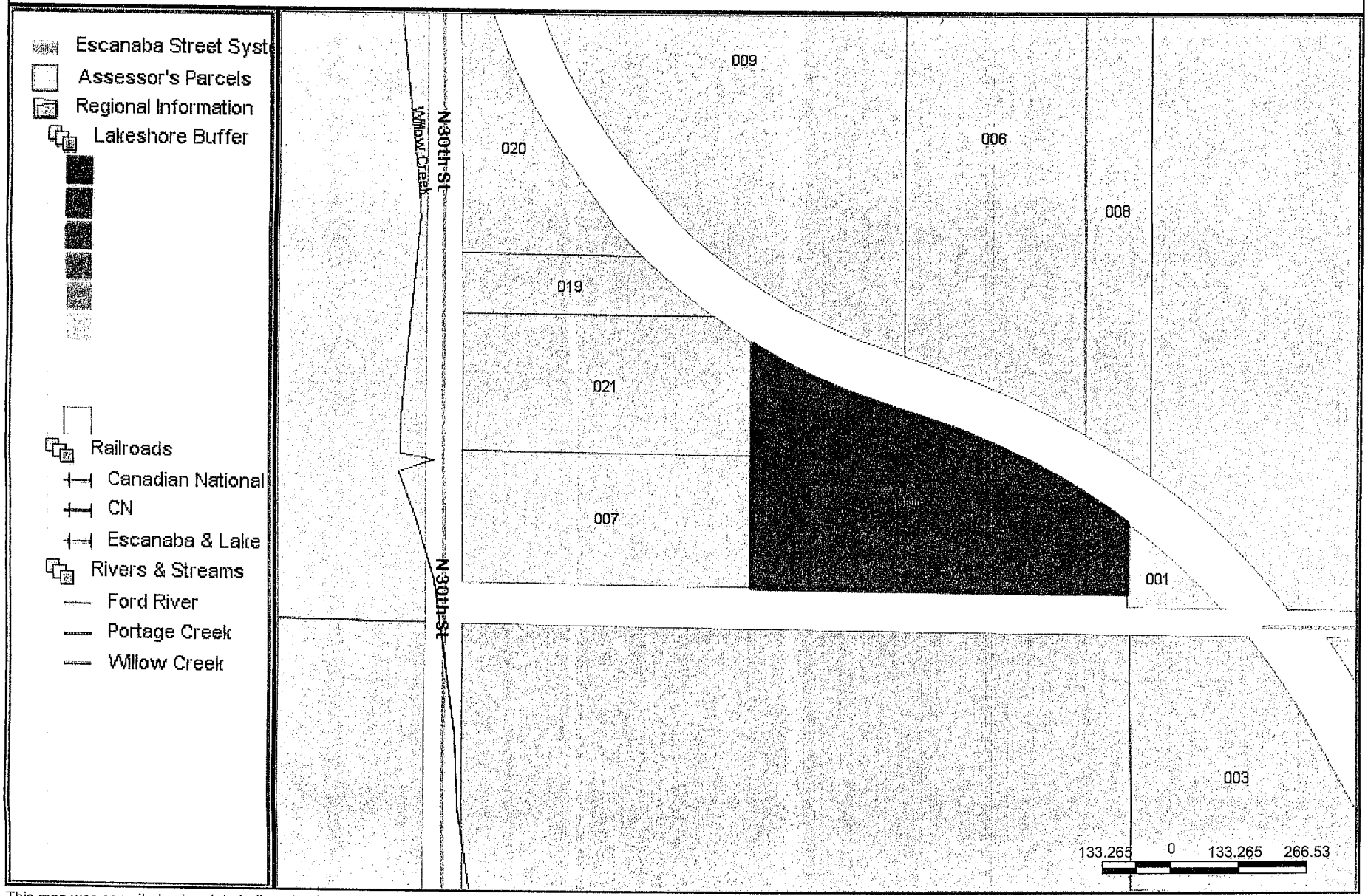

This map was compiled using data believed to be accurate; however, a degree of error is inherent in all maps. This map was distributed "AS-IS" without warranties of any kind, either expressed or implied, including but not limited to warranties of suitability to a particular purpose or use. No attempt has been made in either the design or production of the maps to define the limits or jurisdiction of any federal, state, or local government. Detailed on-the-ground surveys and historical analyses of sites may differ from the maps.

AMERICAN TRANSMISSION COMPANY®

COPY

LEASE

THIS INDENTURE, Made this _____ day of _____, 20___ by and between **UP State Fair Authority**, hereinafter referred to as **Lessor**, and **AMERICAN TRANSMISSION COMPANY LLC**, a Wisconsin limited liability company, hereinafter referred to as **Lessee**.

WITNESSETH, That the **Lessor** does hereby lease, demise and let unto the **Lessee** a parcel of land for the purpose of storing wood, concrete or steel poles, steel transmission towers (dismantled), crossarms, conductors, insulators, and other electric transmission line material and equipment (including trucks, a temporary office, and other necessary vehicles and construction machinery) **in the (NW1/4) Northwest Quarter of the (SE1/4) Southeast Quarter and Northeast Quarter (NE1/4) of the Southeast Quarter (SE1/)4 of Section 24, Town 39 North Range 23 West, City of Escanaba, Delta County, Michigan.** The location of said parcel of land is indicated on the drawing marked Exhibit "A", attached hereto and made a part hereof. The address of said parcel of land is 14th Ave North / 9th Street, Escanaba, MI 49829. The nearest intersection is East of N. 30th St and 14th Ave N.

TO HOLD for an initial term of (18) months commencing on May 1, 2015, and extending through October 31, 2016 and upon 30 days notice to **Lessor**, **Lessee** reserves the option to extend said lease an additional 6 months but to terminate no later than May 1, 2017. **Lessee** yielding and paying rent therefore in the sum of $19,800.00 for the first 18 month term and $1,100.00 for each additional month thereafter. Said rental shall be paid for the initial term upon the execution of this agreement, and **Lessor** hereby acknowledges the receipt thereof. In the event said **Lessee** desires to terminate this lease in advance of the expiration of said 18 month period herein agreed upon, it shall have the right to vacate and abandon said parcel of land. However, **Lessor** shall not be obligated to refund any of the advance rental herein paid for any unused portion of the 18 month rental period.

The **Lessee** and its agents shall have the right to use any existing driveways and install a locked gate if required on Lessor's premises described and shown on Exhibit A, all for the purpose of ingress and egress to and from said leased land, by cars, trucks and other appurtenant equipment. **Lessee** agrees, however, to restore or cause to have restored the premises of the **Lessor** as nearly as is reasonably

possible to the condition existing prior to the use of said premises and/or payment shall be made by **Lessee** for damage, if any, to crops, fences, or domesticated animals caused by its acts.

Lessee shall not cause or permit any hazardous material to be brought upon or used on said leased lands except as is necessary or useful to **Lessee's** day to day operations, however, maintenance of **Lessee's** vehicles and equipment will not be permitted on **Lessor's** lands. **Lessee** agrees that it shall be fully liable for all costs and expenses related to the clean up and removal of any hazardous materials or contamination resulting from **Lessee's** use and occupation of said leased land.

The covenants herein contained shall bind the parties mutually and their successors and assigns.

IN WITNESS WHEREOF, said Lessor has caused these presents to be signed by_____ and _____ , this _____ day of _____, 2015, and said Lessee has caused these presents to be signed by its duly authorized agent this _____ day of _____, 20____.

Sign _____
Print Name

Sign _____
Print Name

LESSOR (Name, Company name, etc.)

AMERICAN TRANSMISSION COMPANY LLC
a Wisconsin limited liability company
By: ATC Management Inc., its Manager

By _____

Name: _____

<Title> Proposed Laydown Yard 9

<Subtitle> EXHIBIT A

McMAHON

Utilities Data

- Water Main
- Storm Main
- Sanitary Main
- Culverts
- Hydrant
- Storm Manhole
- Sanitary Manhole
- Catch Basin
- System Valve
- Outlet
- Record Drawings

Land Base Data

- Water Body
- Parcel Boundary
- Municipal Boundary
- Roads
- Contour Interval

N W E S

03/18/2015
Scale 1:5000

CITY OF Escanaba

P.O. Box 948 • Escanaba, MI 49829-0948 • (906) 786-0240 • fax (906) 786-4755
TDD (800) 649-3777

March 20, 2015

ESCANABA PLANNING COMMISSION
ESCANABA MICHIGAN 49829

Dear Property Owner/Occupant:

A scheduled meeting of the Escanaba Planning Commission has been scheduled for April 9, 2015, at 6:00 p.m. at the City Hall/Library Complex, Room C101 Council Chambers, 410 Ludington Street, Escanaba, MI 49829. The following item will be on the agenda:

Special Land Use Permit – Delta County U.P. State Fair Authority – On or around 9th Avenue North (Undeveloped)

Explanation: The Delta County U.P. State Fair Authority is requesting an 18 month special land use permit be issued which would allow property that is owned and controlled by the Authority near 9th Avenue North to be leased to the American Transmission Company which will be used as a temporary storage facility for ATC's Bay Lake transmission line construction.

You are cordially invited to attend this meeting should you have any comments concerning this project. If you have comments, but are unable to attend this meeting, please submit your written comments to the City of Escanaba Planning Commission prior to April 9, 2015. All written and signed comments will be read into the public record.

The City of Escanaba will provide all necessary, reasonable aids and services, such as signers for the hearing impaired and audio tapes of printed materials being considered at the meeting to individuals with disabilities at the meeting/hearing upon five (5) days notice to the City of Escanaba. Individuals with disabilities requiring auxiliary aids or services should contact the City of Escanaba by writing or calling the City of Escanaba at (906) 786-9402. A copy of the proposed site plan for the referenced project can be viewed at City Hall, Second Floor, 410 Ludington Street, Escanaba, MI, Monday through Friday, 7:30 a.m. to 4:00 p.m.

Sincerely,

Patrick Connor, Chairperson
Escanaba Planning Commission

<Title> Proposed Laydown Yard 9

<Subtitle> EXHIBIT A

McMAHON
ENGINEERS ARCHITECTS

Utilities Data

- Water Main
- Storm Main
- Sanitary Main
- Culverts
- Hydrant
- Storm Manhole
- Sanitary Manhole
- Catch Basin
- System Valve
- Outlet
- Record Drawings

Land Base Data

- Water Body
- Parcel Boundary (Pin & Owner)
- Municipal Boundary
- Roads
- Contour Interval

N W E S

03/18/2015
Scale 1:5000

DELTA COUNTY
310 LUDINGTON STREET
ESCANABA, MI 49829

BOHOTI LLC
2220 6TH AVENUE NORTH
ESCANABA, MI 49829

LINCOLN ESTATES INC
7508 CLUBHOUSE DRIVE
GLADSTONE, MI 49837

A & L RECYCLING LLC
2000 MILLBOCKER ROAD
GAYLORD, MI 49735-7743

DOUBLE B ENTERPRISE LLC
P O BOX 277
ESCANABA, MI 49829

BOHOTI LLC
2220 6TH AVENUE NORTH
ESCANABA, MI 49829

SKERBECK FAMILY CARNIVAL INC
P O BOX 364
ESCANABA, MI 49829

E&LS RAILROAD
P O BOX 217
WELLS, MI 49894

DELTA COUNTY
310 LUDINGTON STREET
ESCANABA, MI 49829

FASTENAL COMPANY
1012 NORTH 30TH STREET
ESCANABA, MI 49829

OCONNOR RAYMOND & MICHELLE
1016 NORTH 30TH STREET
ESCANABA, MI 49829

Sent to Clerk 3/26/15

CITY OF Escanaba

P.O. Box 948 • Escanaba, MI 49829-0948 • (906) 786-0240 • fax (906) 786-4755
TDD (800) 649-3777

CITY OF ESCANABA
PLANNING COMMISSION

At a meeting of the Escanaba Planning Commission scheduled for April 9, 2015, at 6:00 p.m. at the Escanaba City Hall/Library Complex, Room C101 Council Chambers, 410 Ludington Street, Escanaba, MI 49829, a public hearing will be conducted on the following:

Special Land Use Permit – Delta County U.P. State Fair Authority – On or around 9th Avenue North (Undeveloped)

Explanation: The Delta County U.P. State Fair Authority is requesting an 18 month special land use permit be issued which would allow property that is owned and controlled by the Authority near 9th Avenue North to be leased to the American Transmission Company which will be used as a temporary storage facility for ATC's Bay Lake transmission line construction.

You are cordially invited to attend this meeting should you have any comments concerning any of the agenda items. If you have comments, but are unable to attend this meeting, please submit your written concerns to the City of Escanaba, P.O. Box 948, 410 Ludington Street, Escanaba, MI 49829, prior to April 9, 2015. All written correspondence will be entered into the public record.

Patrick Connor, Chairperson
Escanaba Planning Commission

CITY OF ESCANABA
PLANNING COMMISSION

At a meeting of the Escanaba Planning Commission scheduled for April 9, 2015, at 6:00 p.m. at the Escanaba City Hall/Library Complex, Room C101 Council Chambers, 410 Ludington Street, Escanaba, MI 49829, a public hearing will be conducted on the following:

Special Land Use Permit -
Delta County U.P. State Fair Authority -
On or around 9th Avenue North (Undeveloped)

Explanation: The Delta County U.P. State Fair Authority is requesting an 18 month special land use permit be issued which would allow property that is owned and controlled by the Authority near 9th Avenue North to be leased to the American Transmission Company which will be used as a temporary storage facility for ATC's Bay Lake transmission line construction.

You are cordially invited to attend this meeting should you have any comments concerning any of the agenda items. If you have comments, but are unable to attend this meeting, please submit your written concerns to the City of Escanaba, P.O. Box 948, 410 Ludington Street, Escanaba, MI 49829, prior to April 9, 2015. All written correspondence will be entered into the public record.

Patrick Connor, Chairperson
Escanaba Planning Commission

3/25/15

NB #1

received
3/17/15

Redevelopment Ready Communities®

Report of Findings

City of Escanaba

MARCH 2015

PURE MICHIGAN®
Michigan Economic Development Corporation

Table of Contents

Executive Summary....3

Methodology....4

Best Practice Findings

Best Practice One: Community Plans and Public Outreach

1.1 – The Plans....5

1.2 – Public Participation....7

Best Practice Two: Zoning Regulations

2.1 – Zoning Regulations....8

Best Practice Three: Development Review Process

3.1 – Site Plan Review Policy and Procedures....10

3.2 – Guide to Development....11

Best Practice Four: Recruitment and Education

4.1 – Recruitment and Orientation....13

4.2 – Education and Training....14

Best Practice Five: Redevelopment Ready Sites®

5.1 – Redevelopment Ready Sites®....15

Best Practice Six: Community Prosperity

6.1 – Economic Development Strategy....17

6.2 – Marketing and Promotion....18

Conclusion....19

Executive Summary

Redevelopment Ready Communities® (RRC) is a certification program supporting community revitalization and the attraction and retention of businesses, entrepreneurs and talent throughout Michigan. RRC promotes communities to be development ready and competitive in today's economy by actively engaging stakeholders and proactively planning for the future – making them more attractive for projects that create places where people want to live, work and invest.

In January 2014, the Michigan Economic Development Corporation (MEDC) announced the second open application round for communities interested in achieving RRC certification. MEDC received submissions from over forty communities across the state. Escanaba's application scored in the top tier and was selected to receive a full RRC assessment. We applaud the city's efforts in working to achieve RRC certification. The foundation of the evaluation is the RRC Best Practices. Developed by experts in the public and private sector, the best practices are the standard to achieve certification and designed to create a predictable experience for investors, businesses and residents working within a community. Communities must demonstrate that all best practice evaluation criteria have been met to receive RRC certification. The report of findings outlines recommended actions to meet each best practice criteria and each community must demonstrate how the required criteria is being accomplished.

Escanaba is the nineteenth community to be evaluated under the statewide RRC program and is on its way to becoming redevelopment ready. With a history of proactive planning and a strong community vision outlined in various planning documents, the city has positioned itself to strengthen local quality of life. Despite solid support for redevelopment projects, proactive planning efforts and community engagement, our evaluation found Escanaba still has work to do in order to receive RRC certification. In a time when businesses can locate anywhere in the world, a community that is dedicated to a proactive approach for redevelopment and straightforward procedures will stand out. While a spirit for redevelopment exists, a public participation plan formalizing the community engagement process must be finalized, available redevelopment sites need to be packaged and marketed and a unified marketing strategy must be established. The RRC certification is a statement to the private sector that Escanaba's development process is streamlined, predictable and user-friendly and these steps will help ensure the city's competitiveness and secure RRC certification.

Methodology

The basic assessment tool for evaluation is the RRC Best Practices. These six standards were developed in conjunction with public and private sector experts and address key elements of community and economic development. A community must demonstrate all of the RRC Best Practice components have been met to become RRC certified. Once received, certification is valid for three years.

Measurement of a community to the best practices is completed through the RRC team's research, observation and interviews, as well as the consulting advice and technical expertise of the RRC Advisory Council. The team analyzes a community's development materials, including, but not limited to: the master plan; redevelopment strategy; capital improvements plan; budget; public participation plan; zoning regulations; development procedures; applications; economic development strategy; marketing strategies; and website. Researchers observe the meetings of the community's governing body, planning commission, zoning board of appeals and other committees as applicable. In confidential interviews, the team also records the input of local business owners and developers who have worked with the community.

A community's degree of attainment for each best practice criteria is visually represented in this report by the following:

	Green indicates the best practice component is currently being met by the community.
Yellow	Yellow indicates some of the best practice component may be in place, but additional action is required.
	Red indicates the best practice component is not present or outdated.

This report represents the findings of the evaluation of the city of Escanaba's redevelopment processes and practices. All questions should be directed to the RRC Team at RRC@michigan.org.

Best Practice 1.1- The Plans

Best Practice 1.1 evaluates community planning and how the redevelopment vision is embedded in the master plan, downtown development plan, corridor plan and capital improvements plan. The master plan sets expectations for those involved in new development and redevelopment, giving the public some degree of certainty about their vision for the future, while assisting the city in achieving its stated goals. Local and city-wide plans can provide key stakeholders with a roadmap for navigating the redevelopment process in the context of market realities and community goals.

The Michigan Planning Enabling Act (MPEA), Public Act 33 of 2008, requires that the planning commission create and approve a master plan as a guide for development and shall review the master plan at least once every five years after adoption. Escanaba's master plan was adopted in 2006 and the city is currently working with a consultant to update the plan. As the update has not been completed, the evaluation focuses on the 2006 master plan. The revitalization of Escanaba's historic downtown and lakeshore is a focus of multiple planning documents, including the master plan, Northshore Redevelopment Plan and Downtown Development and TIF plan.

Goals include converting the underutilized waterfront and portions of Ludington Street into mixed use areas, reorganizing the downtown into concentrated definable districts and developing of a variety of housing types. Both the master and downtown plan outline specific projects and programs to unify the city, encourage economic viability and assist with regional competitiveness. Objectives identify initial actions and the primary parties responsible for implementation. Each project has an associated time frame, which serves as a benchmark for fiscal and planning purposes. The forthcoming master plan update should also incorporate these elements to meet the Best Practice criteria. The master plan identifies the zoning ordinance as the most effective implementation tool for many programs and projects, particularly for increasing the variety of housing types and reorganizing downtown districts, which would require zoning amendments. The city should plan to align priority projects in the six-year capital improvements plan (CIP) within identified priority redevelopment areas and target available resources to maximize return on investment.

Walkability is an important concept in sustainable design and has valuable economic, environmental and health benefits. According to walkscore.com, Escanaba is "somewhat walkable" and some errands can be accomplished on foot. The city is currently working to connect the city's bike path with Gladstone's proposed bike plan project. All recent planning documents highlight the importance of interconnected pedestrian-oriented facilities as an integral part of the city's transportation network.

Dwindling resources and increasing costs put pressure on local governments to make limited budgets work more efficiently. A comprehensive CIP is an essential tool for the planning and development of the social, physical, and economic wellbeing of a community, can be used as a tool to implement the master plan and provides a link between planning and budgeting for capital projects. Escanaba has adopted a six year CIP that is reviewed and updated annually and is available on the city's website. Capital projects are consistent with adopted plans and have been prioritized. Planning for future investment is not only a best practice for redevelopment readiness, but a CIP encourages project coordination internally and externally and assists with implementing the community vision established during the master planning process. Return on investment may be maximized by using local capital improvement funds, along with state and federal funding, to leverage private investment. Coordination with multiple agencies and community groups to focus funding is key to successful implementation.

Status	Evaluation Criteria	Recommended Actions for Certification	Estimated Timeline
Yellow	The governing body has adopted a master plan in the past five years.	☐ Adopt an updated master plan in compliance with the MPEA and Best Practice 1.1	15 months
	The master plan identifies a strategy for redevelopment or the governing body has adopted a redevelopment plan.	✓	
	The governing body has adopted a capital improvements plan.	✓	
	The governing body has adopted a downtown plan, if applicable.	✓	
	The governing body has adopted a corridor plan, if applicable.	✓	

DRAFT

Best Practice 1.2- Public Participation

Best Practice 1.2 assesses how well the community identifies and engages its stakeholders on a continual basis. Public participation aims to prevent or minimize disputes by creating a process for resolving issues before they become an obstacle. Stakeholders are frequently engaged in the planning process and Escanaba demonstrates that public participation efforts are proactive. The city is currently updating the master plan and the planning process is intended to encourage citizen participation to ensure that consensus on the direction of the plan is achieved. The city has used traditional and proactive methods to engage stakeholders including council announcements, newsletters, bimonthly televised manager's calls, individual mailings, cable notification, newspaper advertising, online postings, social media, focus groups, community workshops and charrettes. Escanaba's city manager hosts a monthly "Java with Jim" gathering to receive feedback from community stakeholders. Results and outcomes are shared through social media posts, meetings, minutes posted online and within planning documents. Escanaba has achieved broad community participation during planning processes, leading to the creation of plans that define the community's vision and elicit widespread support.

While Escanaba demonstrates exceptional public engagement efforts, the city must draft a public participation plan, identifying interested and affected stakeholders and their unique communication needs. The public participation plan should serve as the city's best practices for obtaining input and acknowledge that public input in planning and policy development processes is crucial to building consensus and obtaining buy in from community stakeholders.

Status	Evaluation Criteria	Recommended Actions for Certification	Estimated Timeline
	The community has a public participation plan for engaging a diverse set of community stakeholders.	☐ Draft a public participation plan as outlined in Best Practice 1.2	6 months
	The community demonstrates that public participation efforts go beyond the basic methods.	✓	
	The community shares outcomes of public participation processes.	✓	

PURE MICHIGAN
Michigan Economic Development Corporation

Best Practice 2.1 – Zoning Regulations

Best Practice 2.1 evaluates the city's zoning ordinance to determine how well it regulates and implements the goals of the master plan. Inflexible or obsolete zoning regulations can discourage development. As the legal tool to implement the master plan, it is critical that zoning regulations align with master plan recommendations for land use. Implementation strategies described in Escanaba's master plan provide a framework to use the zoning ordinance as the instrument to transform the vision of the master plan into reality. Many of the tasks outlined promoting mixed use development and reorganize the downtown require amendments to the zoning ordinance. Once the forthcoming master plan update has been adopted, the city should review the zoning ordinance to ensure the two are in alignment.

Escanaba's zoning ordinance and map are accessible online, on the city's website and via an online publishing service, allowing developers and other interested stakeholders to access information at any time. While special land use requirements and approval procedures are clearly defined and general review standards and conditions of approval are outlined in the ordinance, the zoning ordinance is somewhat difficult to navigate. When the zoning ordinance is updated, the city should consider streamlining text, adding graphics and including use matrix to clarify regulations.

Zoning is an essential tool for shaping inviting, walkable communities. Escanaba provides for areas of mixed use development in appropriate locations by right, including residential units above non-residential uses in the central retail commercial district on Ludington Street. Encouraging residents to live downtown can add to the 24-hour vitality of the area and increase the sense of community. To increase the variety and the amount of housing available in priority development districts and appeal to the needs of both baby boomers and millennials, additional areas should permit non-traditional housing types. The city should also revise the ordinance to provide for additional districts that permit mixed use by right to allow for flexibility in development types. Form based regulations that emphasize building form and primarily manage physical form, with a lesser focus on land use than traditional zoning, may be appropriate for the downtown, where the city has developed a vision to enhance community character.

By placing a high priority on creating walkable places and mixing uses, communities can reduce the separation of uses, increase the likelihood of walking and biking trips, reduce harmful emissions and increase social interaction. To be walkable, communities must have a non-motorized network of sidewalks and/or pathways and safe crossing areas. Escanaba's zoning ordinance outlines regulations for non-motorized systems, the installation of public sidewalks and bike racks. The city has adopted a complete streets resolution supporting non-motorized enhancements for all users and is working to implement the Non-Motorized Master Plan and Recreation Plan.

Provision of adequate parking can be challenging in downtowns of all sizes. Escanaba's zoning regulations outline requirements for bicycle parking and access management standards have been developed, limiting the number of driveways, encouraging shared access and service drives to improve traffic safety and protect investment in roads. Rethinking parking design to appropriately manage supply and demand and better meet the needs of communities, developers and users is essential. Flexible parking regulations should be considered, including shared parking options, parking maximums, payment in-lieu of parking and waivers.

Stormwater runoff is a major cause of water pollution in developed areas. While Escanaba requires landscape plans for certain types of development, innovative green infrastructure standards should be incorporated when the zoning ordinance is updated. Many green infrastructure elements can be integrated into parking lot designs. Permeable pavements can be installed in

sections and rain gardens and bioswales can be included in medians and along a parking lot perimeter. Benefits include urban heat island mitigation and a more walkable built environment. When the zoning ordinance is updated, standards for green infrastructure such as rain gardens, green roofs and bioswales should be included to help mitigate the effects of stormwater runoff.

Status	Evaluation Criteria	Recommended Actions for Certification	Estimated Timeline
Yellow	The governing body has adopted a zoning ordinance that aligns with the goals of the current master plan.	☐ Review master plan goals and zoning regulations to ensure zoning ordinance regulates for the master plan vision	18 months
Yellow	The zoning ordinance is user-friendly and accessible online.	☐ Add a use matrix or other element and streamline text to improve user-friendliness	18 months
	The zoning ordinance provides for areas of concentrated development in appropriate locations and encourages the type and form of development desired.	✓	
	The zoning ordinance includes flexible zoning tools to encourage development and redevelopment.	✓	
	The zoning ordinance allows for a variety of housing options.	✓	
	The zoning ordinance includes standards to improve non-motorized transportation.	✓	
Yellow	The zoning ordinance includes flexible parking requirements.	☐ Add flexible parking standards	18 months
Yellow	The zoning ordinance includes standards for green infrastructure.	☐ Incorporate green infrastructure standards into the zoning ordinance	18 months

Best Practice 3.1 – Development Review Policy and Procedures

Best Practice 3.1 evaluates the city's site plan review policies and procedures, project tracking and internal/external communications. The purpose of the site plan review process is to ensure that plans for specific types of development comply with the zoning ordinance. An efficient site plan review process is integral to becoming redevelopment ready and can assist a community in attracting investment dollars. Site plan review procedures and timelines should be communicated in a clear and concise manner to prospective developers and business owners. To do this, sound internal procedures need to be in place and followed. The framework for Escanaba's site plan review process is clearly documented in the zoning ordinance and regulations identify the planning commission as the party responsible for review.

The city of Escanaba has two staff members well versed in planning and zoning requirements that serve as intake professionals and are capable of completing preliminary reviews of plans submitted. The City Manager serves as the Zoning Administrator and is the point person on development projects and coordinates the review of site plans. Developers and consultants can meet with staff involved with the site plan review process to discuss conceptual development project details, free of charge. Pre-application conferences are encouraged by staff, and applicants may also meet with the Planning Commission to elicit feedback and receive guidance. While the availability of pre-application meetings are outlined in the zoning ordinance, the availability of and clearly defined expectations for pre-application meetings should be posted online.

Documenting internal processes helps to ensure consistency over time, regardless of staffing. Streamlined, well documented site plan policies ensure a smooth and predictable experience when working with a community. The city has created a site plan review process flowchart that is available online. Timelines should be added to outline expectations for the applicant. The internal site plan review team meets with the developer, and outside agencies, such as MDOT and the Delta County Building Department are included when necessary. Projects are not formally tracked through the development process and the city should create a simple tracking mechanism. Tracking development projects allows for increased transparency and efficiency, keeps staff well informed, provides clarification as to the status of a project and can assist in measuring the results of the approval process.

Significant public opposition or concern can slow down the review and approval of a project and ultimately cost a developer time and money. Often, public concern arises out of limited or incorrect understanding of a project. By soliciting public input early in the process, well before required public meetings and hearing, neighbors can make their concerns known to the developer and decision makers. Escanaba encourages developers to meet with neighborhood stakeholders and the public is invited to City Hall to review development plans. Notices that include a preliminary site plan are mailed out to adjacent property owners.

Overall, stakeholder interviews provided positive feedback, particularly with the personalized customer service provided by city staff. While Escanaba exhibits great customer service and responsiveness, there are opportunities for improvement. While city staff evaluates the site plan review process at various board and commission meetings, the city does not obtain formal customer feedback. The city should develop a customer feedback mechanism to determine the success of or issues with the site plan review process, and amend the process accordingly.

Status	Evaluation Criteria	Recommended Actions for Certification	Estimated Timeline
	The zoning ordinance articulates a thorough site plan review process.	✓	
	The community has a qualified intake professional.	✓	
	The community defines and offers conceptual site plan review meetings for applicants.	✓	
	The community has a clearly documented internal staff review policy.	✓	
	The appropriate departments engage in joint site plan reviews.	✓	
4/21/20	The community has a method to track development projects.	☐ Develop a simple tracking mechanism for development projects	6 months
	The community promptly acts on development requests.	✓	
	The community encourages a developer to seek input from neighboring residents and businesses at the onset of the application process.	✓	
4/21/20	The community annually reviews the successes and challenges with the site plan review and approval procedures.	☐ Develop a customer feedback mechanism	6 months

Best Practice 3.2 – Guide to Development

Best Practice 3.2 evaluates the availability of the community's development information. Land use planning and development is a process that involves a wide range of stakeholders. For the process to work effectively, everyone involved must know their roles and responsibilities. Development materials should be assembled to help citizens, developers and public officials gain a better understanding of how the development process in each community works. Contact information, meeting schedules and packets, relevant plans, application forms and submittal requirements are available on Escanaba's website. The city has also developed flowcharts to assist with navigating through various development processes.

It is important that developers understand review and permitting costs at the start of the process, so there are no surprises later. While Escanaba's fee schedule is readily available on the city's website, it was last adopted in 2004. The city should review the fee schedule annually during the budget process to ensure that fees and costs are fair to applicants and affordable by the community.

Status	Evaluation Criteria	Recommended Actions for Certification	Estimated Timeline
	The community maintains an online guide to development that explains policies, procedures and steps to obtain approvals.	✓	
Yellow	The community annually reviews the fee schedule.	☐ Review the fee schedule annually	3 months

DRAFT

Best Practice 4.1 – Recruitment and Orientation

Best Practice 4.1 evaluates how a community conducts recruitment and orientation for newly appointed or elected officials and board members. Numerous boards, commissions and committees advise city leaders on key policy decisions. An online application for open board and commission seats has been developed and vacancies are posted on the city's website and newsletter. While each board and commission has a dedicated page on the city's website with a description of responsibilities, a brief overview of the role of each group should be added to the application.

Assisting newly elected officials and appointees with learning basic information about the structure and processes of government and community and economic development is vital to them playing a part in the city achieving its goals and objectives. The city has compiled all documents for orientation packets online and the land development tools webpage includes rules of procedure, pertinent forms and applications, Michigan Municipal League handbooks and relevant planning, zoning and development information to provide to newly elected and appointed officials.

Status	Evaluation Criteria	Recommended Actions for Certification	Estimated Timeline
	The community sets expectations for board and commission positions.	✓	
	The community provides orientation packets to all appointed and elected members of development related boards and commissions.	✓	

PURE MICHIGAN®
Michigan Economic Development Corporation

Best Practice 4.2 – Education and Training

Best Practice 4.2 assesses how a community encourages training and tracks training needs for appointed and elected officials, board members and staff. Trainings provide officials and staff with an opportunity to expand their knowledge and ultimately make more informed decisions about land use and redevelopment issues. Training needs are reviewed as part of the annual budget process and training is covered under a line item in each department's budget for professional development. Administration contacts both staff and officials about upcoming educational opportunities and encouraged to attend. However, the city acknowledges that due to budget restraints and revenue cuts, training funds are typically the first funds to be scaled back or eliminated. Escanaba should partner with other communities and agencies to continue to offer training, and focus on webinars that can be attended remotely at low to no cost for the city.

Tracking training is a useful way to identify future training needs by documenting education received, identifying gaps and determining what training should be focused on in the future. Escanaba does not formally track individual training needs and attendance. A simple tracking mechanism should be developed to log training information. Turnover in officials and staff can create gaps in knowledge about development, which makes ongoing training essential.

Joint work sessions between boards and commissions are essential to foster communication and effectively address development issues. Collaborative study sessions are held between boards and commissions on a subject specific basis and attendees report back formally at regularly scheduled board and commission meetings. Administration also provides regular updates at various meetings to keep each group informed. The Planning Commission and DDA both present annual performance reports to the city council. The city also hosts monthly Delta County joint governmental meetings where numerous stakeholders discuss hot button issues and share information.

Status	Evaluation Criteria	Recommended Actions for Certification	Estimated Timeline
	The community has a dedicated source of funding for training.	✓	
Yellow	The community identifies training needs and tracks attendance of the governing body, boards, commissions and staff.	☐ Develop a mechanism to track training needs and attendance	6 months
	The community encourages the governing body, boards, commissions and staff to attend trainings.	✓	
	The community shares information between the governing body, boards, commissions and staff.	✓	

PURE MICHIGAN
Michigan Economic Development Corporation

Best Practice 5.1 – Redevelopment Ready Sites®

Best Practice 5.1 assesses how a community identifies, visions and markets their priority redevelopment sites. Communities must think strategically about the redevelopment of properties and investments should be targeted in areas and properties that have the potential for positive future redevelopment. Focusing on the redevelopment and reuse of a single property can catalyze further development around it. Restoring buildings without a vision for the surrounding area is often insufficient to generate lasting change. The master plan identifies the downtown and waterfront as targets for redevelopment, with a focus on mixed use.

While Escanaba has established a vision for several priority districts, the city must research the individual parcels, gather background information, package and proactively market available redevelopment sites. The long-term vision and policy goals for redevelopment areas must be evaluated when determining options for property reuse. Community stakeholders should be given an opportunity to provide input on the redevelopment vision for priority sites. Stakeholder involvement can assist Escanaba with using redevelopment as a tool for creating a sense of place based on the city's unique assets, particularly for sites where redevelopment may be viewed as controversial.

The city must identify information that a developer would need to pursue a project on each site and bundle the materials in a property information package that includes available resources. Incentives can be used to strengthen and grow the community and regional economic base. Asserting what the city is willing to negotiate for specific sites will entice developers to spend their time and financial resources pursuing a project in Escanaba. Incentive information should be included in the property information packages when developed. The city should continue to collaborate with the local real estate community and Delta County Economic Development Alliance (DCEDA) on cross-promotional marketing of properties. Property information packages should be posted on the city's website.

Status	Evaluation Criteria	Recommended Actions for Certification	Estimated Timeline
	The community identifies and prioritizes redevelopment sites.	☐ Identify and prioritize redevelopment sites	6 months
Yellow	The community gathers preliminary background information for prioritized redevelopment sites.	☐ Gather background information for specific priority sites	6 months
	The community has development a vision for the priority redevelopment sites.	✓	
Yellow	The community identifies available resources and incentives for prioritized redevelopment sites.	☐ Identify available resources and incentives for priority redevelopment site	9 months
	A property information package for the prioritized redevelopment site(s) is assembled.	☐ Complete property information package for priority redevelopment site	9 months
	Prioritized redevelopment sites are actively marketed.	☐ Post property information package on city's website	9 months

PURE MICHIGAN®
Michigan Economic Development Corporation

Best Practice 6.1 – Economic Development Strategy

Best Practice 6.1 evaluates what goals and actions a community has identified to assist in strengthening its overall economic health. Strategic economic development planning is critical to attract jobs and new investment in communities. Escanaba's master plan emphasizes building on existing infrastructure to rejuvenate the economy, with a focus on tourism, industry and retail. The plan outlines economic opportunities and challenges and has identified a vision for realizing a diversified economy. Specific economic development projects have been identified along with implementation steps, a timeline and responsible parties. The city annually reviews the strategy and its implementation steps.

Escanaba partners with the Delta County Economic Development Alliance (DCEDA) for business attraction, retention and expansion efforts. The DCEDA serves as a one-stop shop for businesses and site selectors and works with federal, state and local resources to coordinate formal incentive programs, including TIF, low interest loans and tax credits. The city should continue to collaborate with the DCEDA to drive job creation and retention and promote the city's priority redevelopment sites.

The city is actively participating in the central Upper Peninsula's Regional Prosperity Collaborative and is a partner in the newly formed Superior Trade Zone (STZ) that will collaboratively focus on reinvigorating economic development and job creation in the central Upper Peninsula. All units of government in Delta and Marquette counties are participating. The STZ business plan embraces economic development strategies built upon regional strengths and support for existing and emerging industry clusters. The STZ is focusing on public-private collaboration on a regional scale to support economic development efforts and includes the development of strategic priorities and action items. Escanaba's economic development strategies should be reviewed during the master plan update to ensure alignment with current regional objectives and amended as necessary.

DRAFT

Status	Evaluation Criteria	Recommended Actions for Certification	Estimated Timeline
	The community has approved an economic development strategy.	✓	
	The community annually reviews the economic development strategy.	✓	

Best Practice 6.2 – Marketing and Promotion

Best Practice 6.2 evaluates how the community promotes and markets itself. Community marketing and promotion can take many forms, but the goal is to create a positive image that rekindles community pride and improves consumer and investor confidence. Marketing and branding should frame what sets a community apart from others. Escanaba does not currently have a community marketing strategy that identifies specific opportunities and strategies to attract businesses, talent and real estate development. Development of marketing strategies should be coordinated with the DDA, the Commerce Center and other tourism providers. Enhanced marketing efforts can assist with sharing the established vision, values and goals outlined in the master plan. The marketing strategy should also include specific approaches to promoting prioritized redevelopment sites. Coordinated marketing strategies strive to strengthen the image of the community, heighten awareness and promote the city. Escanaba must market the city with the intent of positioning the community as an attractive place to live, work and invest.

Visitors to a community's website need to be able to find accurate information quickly and the importance of a user-friendly website cannot be overstated. The city's website is somewhat difficult to navigate. The website includes pages where pertinent planning, zoning and economic development information is assembled, but the information is overwhelming and can be difficult to locate and search for. Reorganizing the website can improve ease of use and allow information to be easily accessed at any time. Council and board/commission meeting packets, agendas and minutes are posted on the website and are up to date. Property information packages should be uploaded to the website when completed. Escanaba has a community Facebook page that is updated on a regular basis with various announcements and events. The Facebook page link is available on the city's website and the DDA and chamber should also link to the pages. While Escanaba's Twitter account is updated regularly, it is nearly impossible to find, as it is listed under the city treasurer's name and could easily be mistaken for a personal account. The city should consider exploring additional digital platforms for marketing and communication purposes and creating a social media policy to ensure consistency in messaging.

Status	Evaluation Criteria	Recommended Actions for Certification	Estimated Timeline
[redacted]	The community has developed a marketing strategy.	☐ Develop a unified marketing strategy as outlined in Best Practice 6.2	12 months
Yellow	The community has an updated, user-friendly municipal website.	☐ Reorganize municipal website to improve the user experience	12 months

DRAFT

Conclusion

The RRC Program assists communities in maximizing their economic potential by embracing effective redevelopment tools and best practices. The city must find a balance between removing unnecessary delays and hurdles, while preserving the integrity of the community's vision and goals, positioning the city for success. Escanaba has exhibited a strong commitment to improving their redevelopment readiness and is working diligently to meet the best practice criteria and achieve the Redevelopment Ready Certified Community designation. Next steps for the city include the governing body adopting a resolution of support to proceed with the RRC program. Escanaba will need to continue to implement actions toward achieving certification. Staff has attended the RRC Best Practice trainings and is required to submit quarterly progress reports to inform the RRC Team of progress made in terms of implementing the necessary steps to meet the RRC Best Practices. Once Escanaba has met all of the Best Practice criteria, the city will be a certified Redevelopment Ready Community.

DRAFT

February 27, 2015

MOVING UPWARD

A PLAN FOR REGIONAL PROSPERITY

NB #2

INTRODUCTION

In 2013, Michigan's Department of Technology, Management, and Budget (DTMB) developed the Regional Prosperity Initiative to encourage regional collaboration of organizations in a time of dwindling resources, overlapping goals, and competing priorities. Competitive funding of $2.5 million was made available statewide to State Designated Planning Regions and Metropolitan Planning Organizations that chose to apply.

DTMB awarded incentive funding at three different levels:

- Regional Prosperity Collaborative: A Regional Prosperity Collaborative is any committee currently existing or developed by a regional planning organization which serves to bring organizational representation together among the required participants (see below) from within a region for the purpose of creating a regional prosperity plan. Up to $250,000 in funding.

- Regional Prosperity Council: A Regional Prosperity Council has shared administrative services and an executive governing entity, as demonstrated by a formal local agreement(s). Up to $375,000 in funding.

- Regional Prosperity Board: A Regional Prosperity Board, at a minimum, must demonstrate the consolidation of regional metropolitan planning organization board(s), state designated regional planning agency board(s), workforce development board(s), and federally designated economic development district(s). Up to $500,000 in funding.

THE PLAN

THE PLAN

VISION

The Central Upper Peninsula region will continue to be known for its abundant natural resources and numerous tourism and recreational opportunities, and will provide the infrastructure and policies necessary for a business-friendly environment. A strong employment market, outstanding P-20 and continuing education programs, access to healthcare, and a variety of arts, culture, and entertainment opportunities will provide a high quality of life for existing residents and attract new residents, tourists, and businesses to the region.

THE PLAN (cont.)

Grow and diversify the region's economy.

Strengthen the region's talent pipeline.

Optimize infrastructure and network conditions and connectivity across the Central U.P.

Enhance and expand educational opportunities across the region.

Improve quality of life for all residents.

THE PLAN

STRATEGIES

Participants in the 2014 RPI meetings developed strategies to help reach the five goals. Of these strategies, participants identified the following fifteen as regional priorities for the next five years:

1. **Expand broadband and wireless access across the region.**

2. **Pursue funding to research short- and long-term energy solutions for the U.P.**

3. **Integrate and expand educational opportunities in Advanced Manufacturing, Health Care, and I.T.**

4. **Encourage and support the upgrading of skills of the incumbent workforce to align with employer needs.**

THE PLAN

5. Promote and support value-added economic activity.
6. Improve and market P-20 (pre-kindergarten through college) CTE and vocational programs.
7. Support entrepreneurial development by using existing state and federal programs and fostering local initiatives.
8. Link communities to funding for recreation and arts & culture opportunities.
9. Continue to market recreational and arts & culture opportunities in the region.

THE PLAN

10. Promote and support Central U.P. agriculture.

11. Improve regional tourism promotion, networking, and opportunities.

12. Review existing community health needs assessments and determine opportunities for collaboration to create greater efficiencies of delivery and creation of new services.

13. Encourage and support safe, efficient, and affordable transportation options.

14. Conduct a study to determine the effects of rural wage disparity on filling in-demand jobs.

15. Analyze the region's housing needs and develop a plan to fill gaps.

THE PLAN

NEXT STEPS

CUPPAD and partner RPI organizations have already begun to leverage local, state, and federal funding to further some of these initiatives, with the goal of implementing all strategies by 2019.

- **Generating Economic Development:** Explore cost-effective energy generation options for industrial parks throughout Michigan's Upper Peninsula in partnership with Michigan Tech and U.S. EDA.

- **Community Health Needs Assessments:** Determine common community healthcare needs, issues, and themes of concern across the U.P. and explore new and more efficient, collaborative service delivery options for addressing gaps, in partnership with the Superior Health Foundation and Upper Peninsula Healthcare Roundtable.

- **Rural Wage Disparity Study:** Focused on a limited set of positions to create a dialogue and exploration of current and potential new tools and strategies for assisting companies with recruitment challenges and opportunities unique to the U.P.; quantified targeted wage comparisons through data analysis; reach out to employers to engage them in discussions to address their recruitment challenges.

RPI 2015

CUPPAD successfully applied for RPI funding for 2015 to build on last year's efforts to:

- Conduct regional organizational and infrastructure asset mapping
- Develop a 10-year regional prosperity plan and economic development blueprint
- Implement priority projects identified in the 2014 plan; several in partnership with WUPPDR and EUP Planning

Broadband Surveys and Mapping

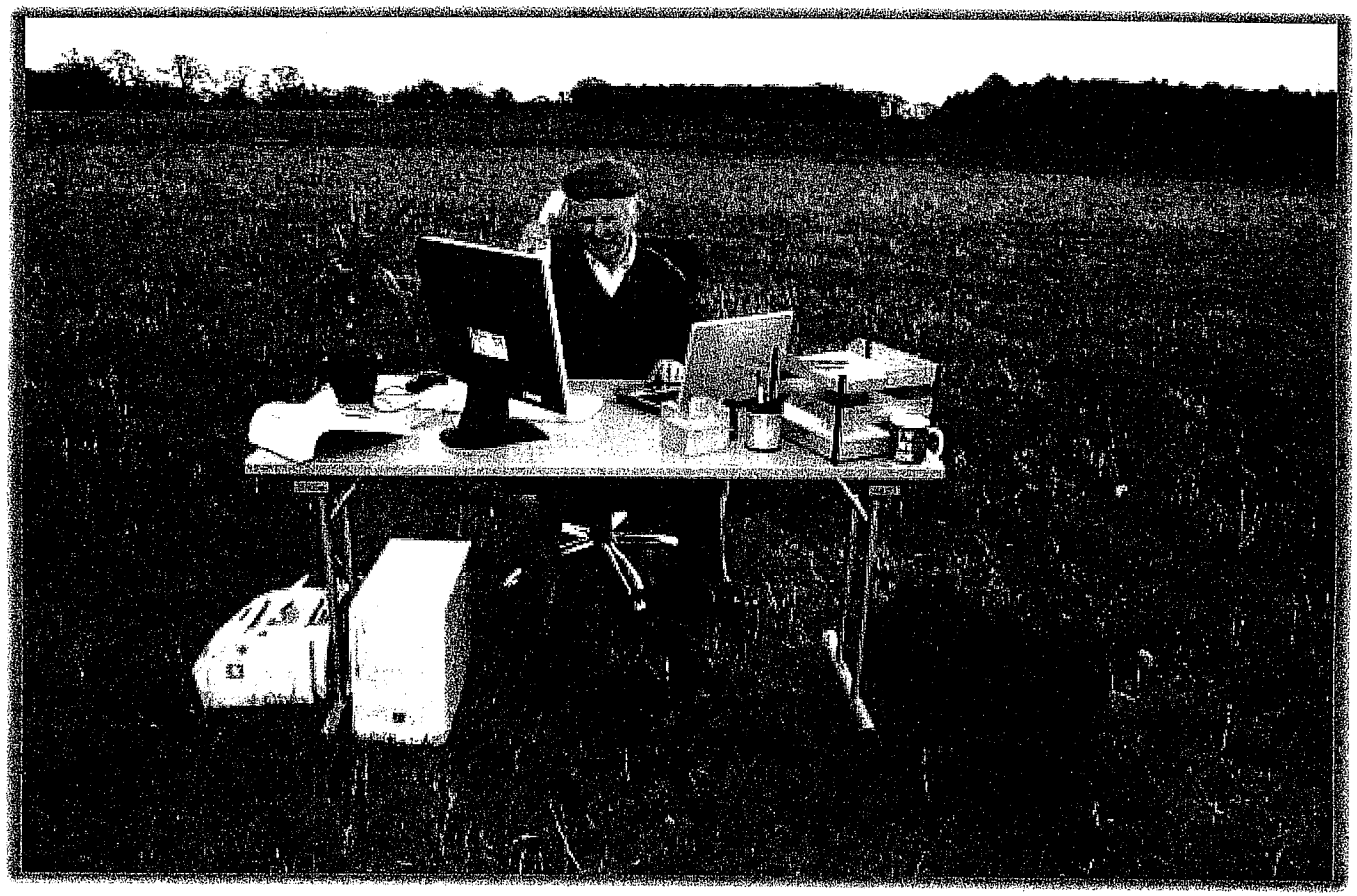

CTE Marketing & Asset Mapping

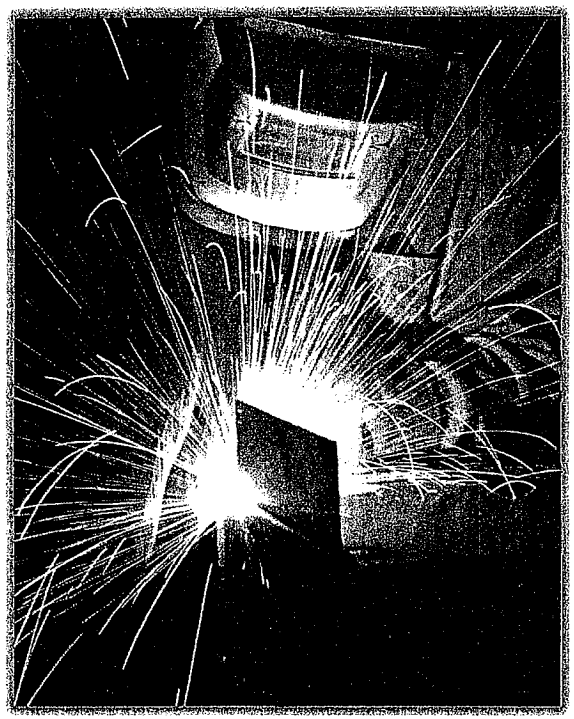

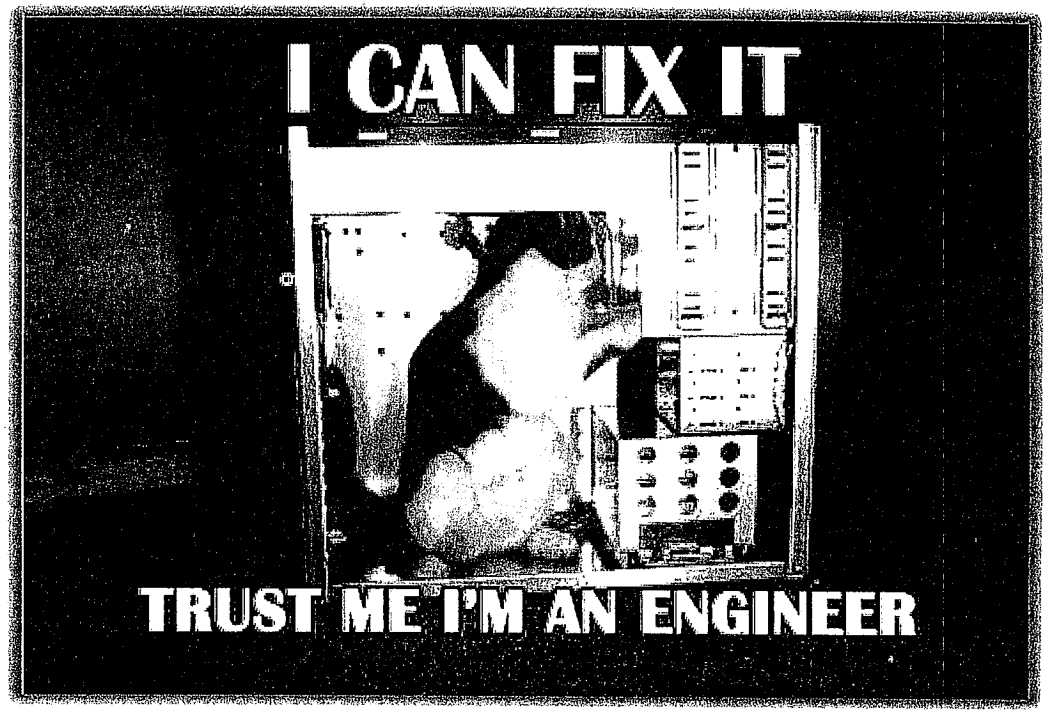

Sustainability Plan

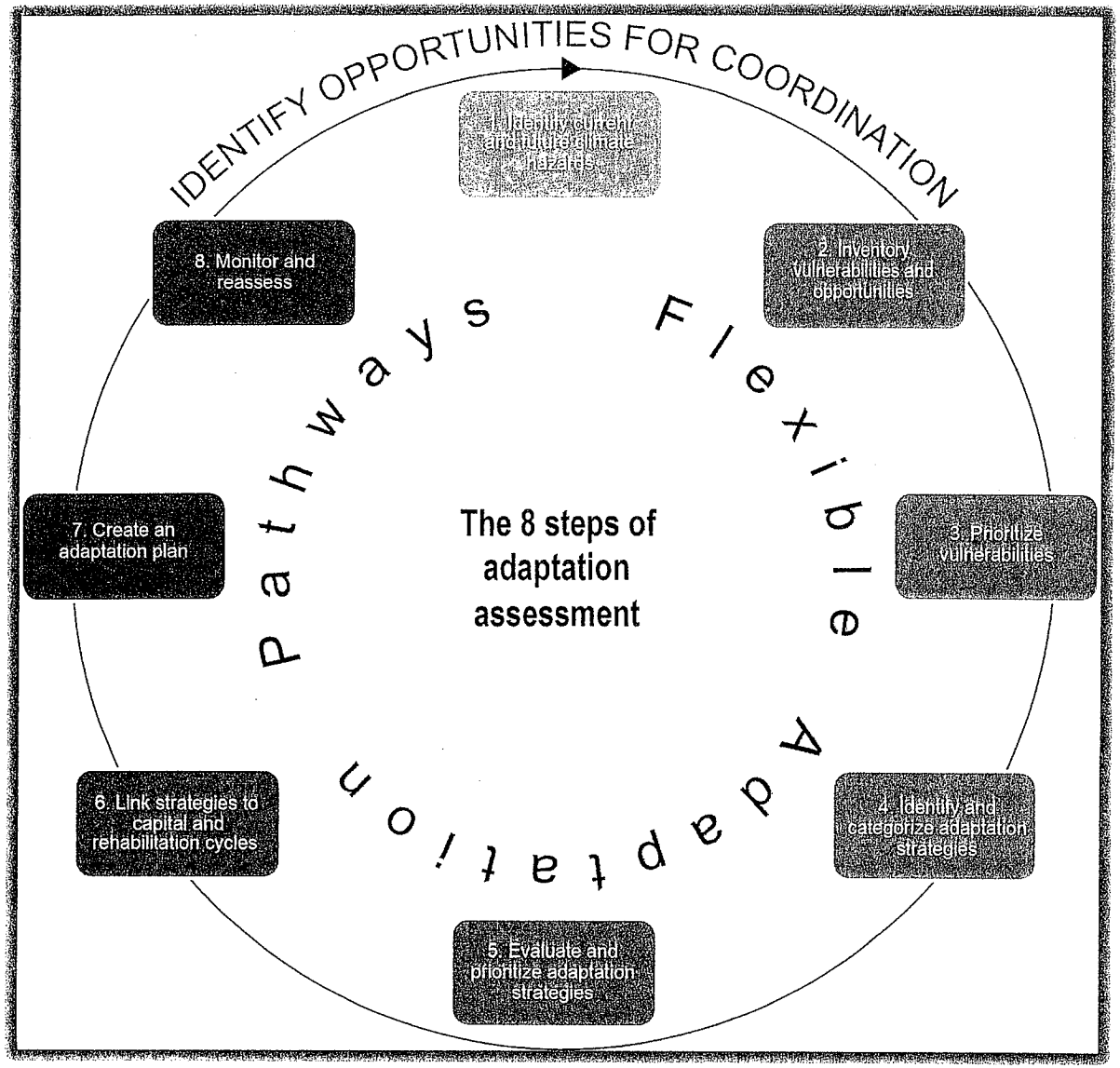

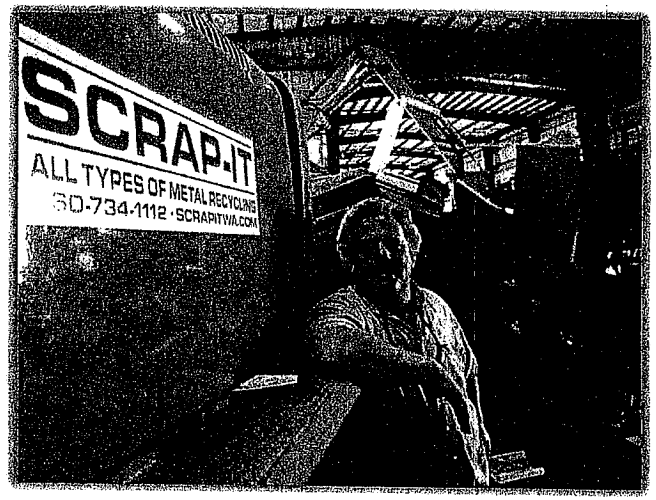

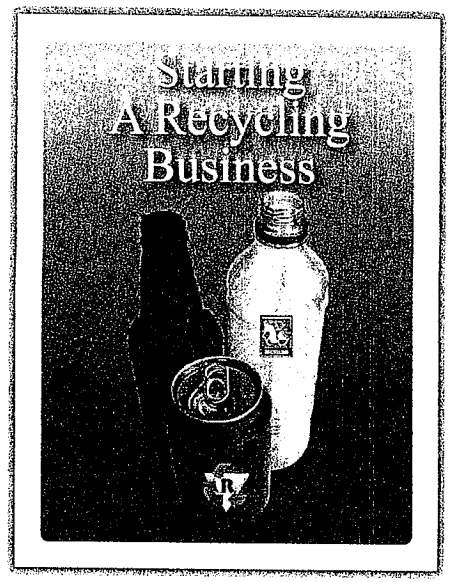

Regional Recreation Plan

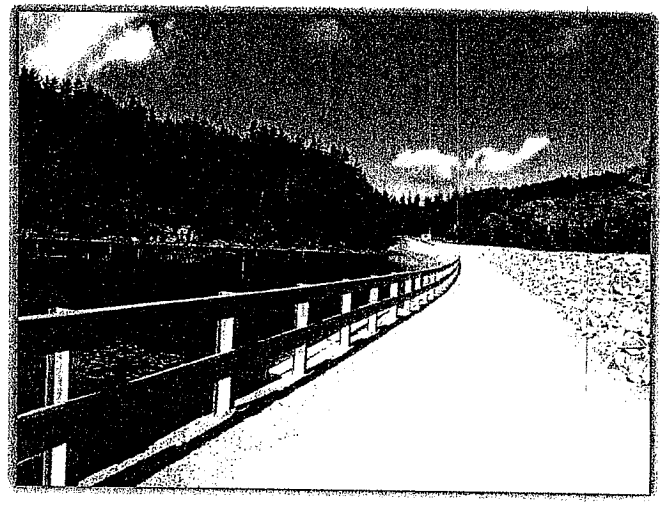

Housing Plan/Target Market Analyses

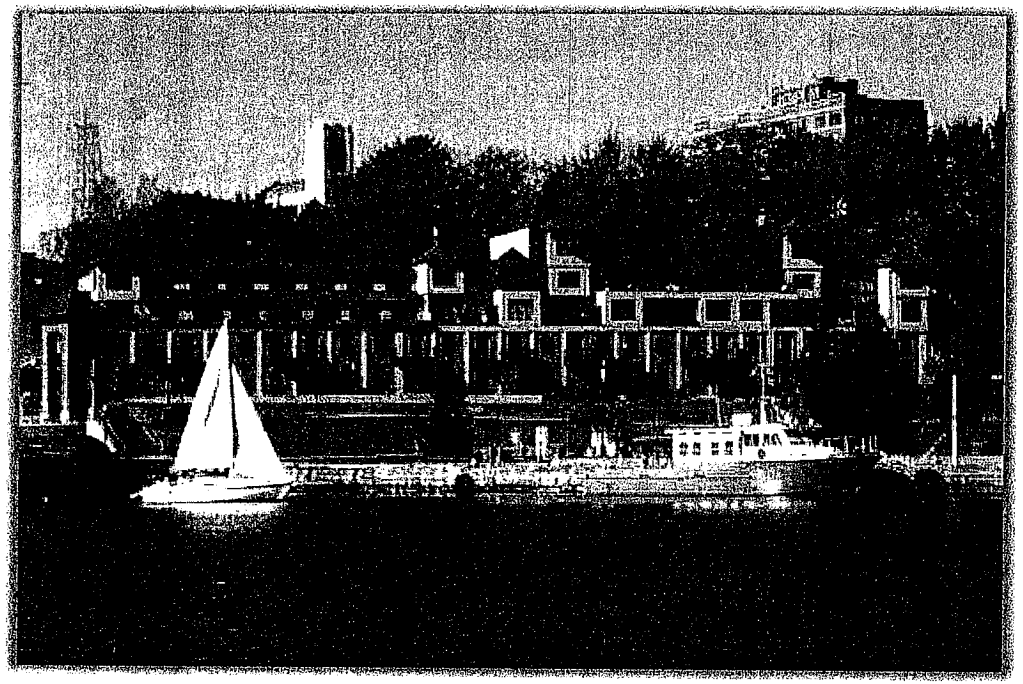

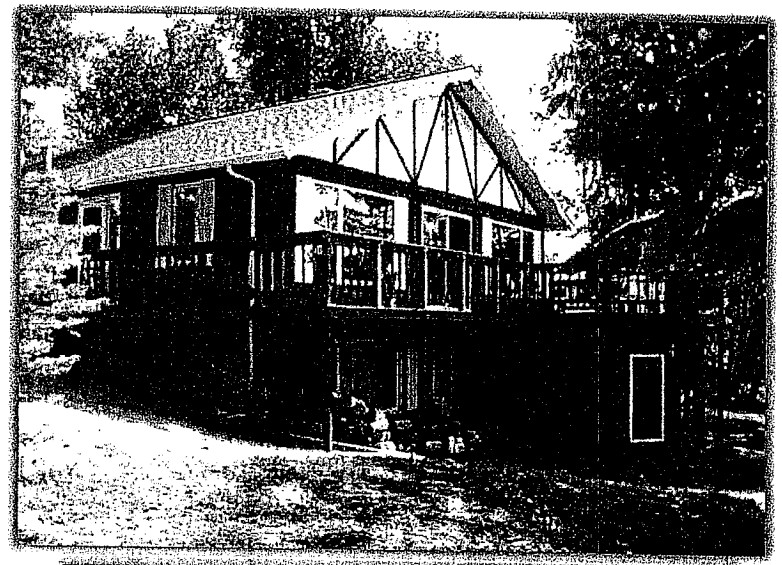

RPI Advisory Committee

The RPI Advisory Committee will guide the Regional Prosperity Initiative in the Central Upper Peninsula and function as the CEDS Strategy Committee.

Name	Organization
Donna LaCourt	MDARD
Dave Anthony	Hannahville
Amy Clickner	UPCDC
Vince Bevins	MDOT
Rochelle Cotey	AlTran
Joel Schultz	CUPPAD
Orrin Bailey	Michigan Works!
Laura Coleman	Bay College
Jackie Pride	Verso
Jeff Ratcliffe	UPEDA
Bob Eslinger	NMU
Jim Baker	Michigan Tech
Jon Mead	UPCAP
Carl Lindquist	Lake Superior Watershed Partnership
John Madigan	Pictured Rocks Cruises
Stacy Haughey	DNR
Tony Retaskie	U.P. Construction Council
Gary LaPlant	U.P. Community Foundation
Julee Kaurala	DHS
Suani Nieto	Delta County Airport
Bruce Orttenburger	Dickinson Area Partnership
Jeffrey Holt	Sault Ste. Marie Tribe of Chippewa Indians
Alan Barr	Creative Change

REGION 1B: REVISED SPENDING PLAN AND TIMELINE

Total Requested: $336,000

Section I. Regional Prosperity Council Administration and Development of 10-year Economic Development Blueprint: **$200,000**

- *Event and travel budget for regional prosperity council meetings:* Partially reimburse partner travel to encourage meeting attendance; facility rental and food budget (at approximately $60 a head for estimated 25 participants for 12 monthly meetings and 40 participants for 4 quarterly meetings). **Requested: $27,600 | Leveraged: -**
- *CUPPAD staff cost:* Facilitate CUPPAD's capacity to administer grant funds, coordinate council activities, create progress report and 10 year blueprint/plan, graphic design, update and maintain online performance dashboard, update relevant social media platforms (at CUPPAD's $90/hr billable rate for approximately 1,882 hours of work over course of project). Throughout the process, we will strengthen relationships to reach the Regional Prosperity Board level of collaboration. **Requested: $169,400 | Leveraged: -**
    - *Blueprint/Plan Details:* The FY14 RPI involved some basic asset mapping exercises, which proved very useful in addressing the region's needs generally and identifying strategies and projects. For FY15, we will expand our asset mapping to focus on both capital (public) and organizational assets, and the RPI plan will function as a guide to build upon these assets, organized by the categories in the FY14 plan. For example, the Council might identify an airport industrial park as a major asset, and a need for utility expansion in order to attract more businesses. CUPPAD and partners would work with the community in which the park is located to fund these improvements through education and technical assistance about funding sources – e.g. grants, millages, bonds etc. Similarly, the Council might recognize an EDO as a major asset and see that staffing limitations are preventing growth. Another organization may be able to provide administrative capacity to save time and cost so that the primary functions of the organization could be carried out more effectively. Furthermore, asset mapping will allow identification of additional gaps to be addressed through collaborative strategies.
    - We will have an area subplan for the proposed Superior Trade Zone corridor and other economic hubs identified through the process.
- *Plan progress report + 10 year economic blueprint:* Materials and supplies for printing and mailing (at approximately $15 per 50 page report for 200 copies + estimated mailing costs). **Requested: $3,000 | Leveraged: -**

Section II. 2014 Plan Implementation – Priority projects: **$136,000** | **Denotes UP-wide project

The 2014 RPI identified several specific strategies to further regional prosperity. As part of the FY15 RPI process, we are proposing to implement a number of these strategies through a mixture of RPI and leveraged funds. The deliverables will be included as addenda to the FY15 plan.

- ***Pursue funding to address short- and long-term energy issues in the U.P.* **Requested: - | Leveraged: $102,402** (EDA grant & MTU & CUPPAD Local match)
- ***Collaborative Healthcare Needs Assessment:* **Requested: - | Leveraged: $25,875** ($25,875 Superior Health Foundation grant & UPHCRT match)
- ***Rural Wage Disparity Study:* **Requested: | Leveraged: $68,500** (MEDC/UPCDC grant and CUPPAD In-Kind match)
- *Regional Transit Mobility Study:* **Requested: - | Leveraged: $39,000 MDOT Planning**
- *Expand broadband and wireless access across the region:* CUPPAD, WUPPDR and EUP will work collaboratively on a vertical asset inventory to identify areas within each region that should be targeted for investment by providers to enhance broadband accessibility. The Regions will also collaborate on enhancing e-government with local units of government across Region One. CUPPAD will analyze and map information gathered from existing broadband needs surveys conducted in the region, and conduct additional surveys in areas that have no existing data, to understand needs and demands for broadband and wireless access and distribute results to providers. Apx. $4,000 per county (55 hours * CUPPAD $90/hr billable rate). **Requested: $30,000 | Leveraged: $10,000** (anticipated Local In-Kind match)

- *UP-wide CTE/Vocational asset mapping and regional marketing campaign promoting CTE and vocational programs available in the region:* CUPPAD will work with WUPPDR and EUP Planning to expand the regional CTE and vocational program marketing campaign to a U.P.-wide focus by leveraging resources from local organizations and other state agencies. Additionally, we will work with our fellow planning regions to develop a U.P.-wide asset map of CTE and vocational education facilities, programs, and organizations. **Requested: $21,000 | Leveraged: $79,000** (anticipated cash and in-kind from local educational institutions, organizations and businesses)
- *Analyze the region's housing needs and develop a plan to fill gaps:* CUPPAD will work with a qualified consultant to develop a housing plan, including a Target Market Analysis (TMA), for the region at an estimated $10,000 per county (figure based on cost for other regional TMA studies). This regional housing plan/TMA will illustrate unmet housing needs, especially in relation to a) attracting and retaining talent, b) affordable housing, c) labor force (including migrant). Collaboration with WUPPDR and EUP Planning on the housing plan will occur as appropriate. Approximately $10,000 per county (based on cost estimates from other regional TMAs). **Requested: $40,000 | Leveraged: $20,000** ($10,000 from UPCAP and $10,000 anticipated Local In-Kind Match)
- *Region-Wide Sustainability Plan:* Climate adaptation strategies and effective recycling programs are major regional needs. The Central U.P. is highly susceptible to the effects of climate change because of its dependence on natural resource based industries. In order to be effective, climate adaptation efforts in the Central U.P. must work across scalar and governmental boundaries to develop an adaptation framework in order to foster regional climate resilience. Additionally, recycling programs in the region accept limited materials, opening an opportunity for business development and public/private partnerships to increase levels of service. Apx. $7,500 per county (500 hours * CUPPAD $90/hr billable rate). **Requested: $25,000 | Leveraged: $20,000** (EDA Partnership Planning and anticipated Local In-Kind Match)
- *Region-wide recreation plan:* Recreation-based tourism is an economic driver in the Central U.P., which is home to some of the nation's best hiking, biking, and cross-country skiing trails and fishing and hunting opportunities. Developing a regional recreation plan that takes a collaborative approach to prioritizing recreation improvements and developments will ensure that the area remains a top recreation destination. Additionally, this plan will explore opportunities for additional private investment and public/private partnerships to expand on the recreation industry, such as outfitters and equipment rental services. Local units of government will be able to adopt this plan to apply for state and federal funding to implement prioritized projects. Apx. $5,833 per county (389 hours * CUPPAD $90/hr billable rate). **Requested: $20,000 | Leveraged: $15,000** (EDA grant and anticipated Local In-Kind Match)

The following chart provides a list of activities that will be conducted with the requested funds. Additionally, the chart provides a timeline for each activity and information about how we will measure success.

WORK PLAN AND TIMELINE		
Activity	Timeframe	Success Criteria
Plan Regional Prosperity Council (RPC) and stakeholder meetings and finalize work plans	Within two weeks of funding approval	Distribution of meeting schedules and work plan
Hold kickoff meeting and vote on Advisory Committee members	January 15th, 2015	Formation of Advisory Committee
Host four stakeholder meetings	January, March, July, September 2015	At least 30 attendees.
Host monthly Executive Committee meetings	February 2015 – December 2015	Quorum at each meeting.
Host subcommittee meetings as needed	February 2015 – December 2015	3-5 attendees.
Broadband surveys, CTE marketing, housing plan.	February 2015 – December 2015	Projects completed by 12/15.
Sustainability Plan, Recreation Plan	February 2015 – December 2015	Projects Completed by 12/15
Advisory Committee Adopts Plan	December 2015	Plan adopted by deadline.
Submit plan to DTMB	December 2015	Plan submitted by deadline.

United States Department of the Interior

NATIONAL PARK SERVICE
1849 C Street, N.W.
Washington, D.C. 20240

March 2, 2015

Ms. Jessica Flores
Community Outreach Specialist
Michigan State Historic Preservation Office
735 E. Michigan Avenue
PO Box 20740
Lansing, MI 48909

Dear Ms. Flores:

Thank you for forwarding the necessary documentation concerning the City of Escanaba's application for participation in the Certified Local Government (CLG) Program. I have reviewed your submission and am pleased to concur in your recommendation that Escanaba be certified under the provision of Section 101(c) of the National Historic Preservation Act.

The date of certification will be recorded as the date of this letter. We are also providing a copy of this letter to the City of Escanaba.

We welcome the City of Escanaba as a local partner in the Federal Preservation Program and look forward to working with them to preserve what makes their community special and significant. They have been added to our database and can find their listing there as well as more information on the CLG program by going to: www.nps.gov/clg

If you have any questions about this letter, please feel free to contact me by phone at 202-354-2062, or by email at megan_brown@nps.gov.

Sincerely,

Megan J. Brown

Megan J. Brown
Certified Local Government Program Coordinator

cc: James O'Toole, City of Escanaba